CATALOGUE

CAMOZZI
Automation

PROPORTIONAL TECHNOLOGY

WELCOME TO CAMOZZI AUTOMATION

Camozzi Automation offers range of products including components, systems and technologies for the industrial automation sector, the control of fluids – both liquids and gases – and for applications dedicated to the transportation and health industries.

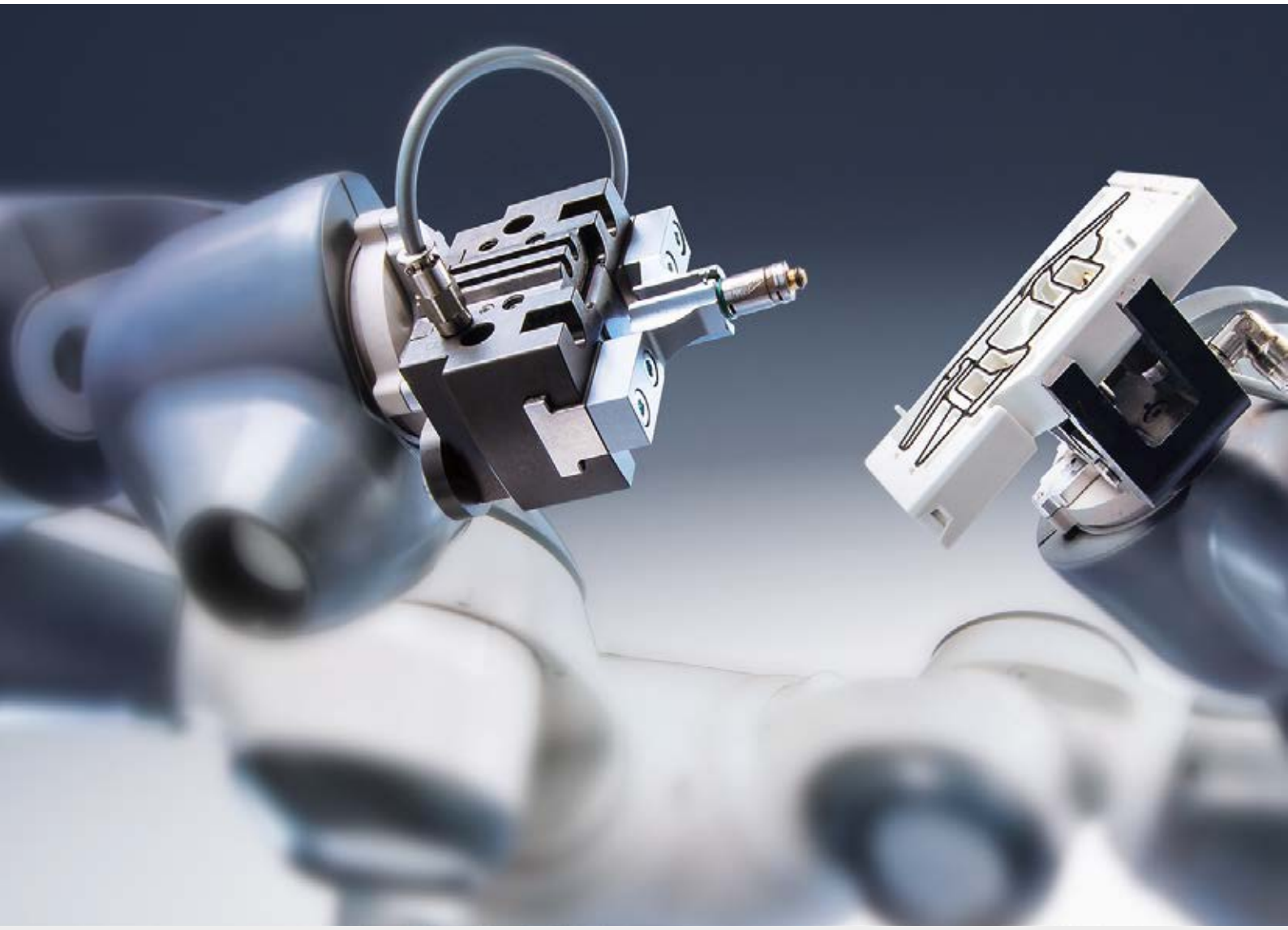

Contacts

Camozzi Automation S.p.A.
Società Unipersonale
Via Eritrea, 20/I
25126 Brescia
Italy
Tel. +39 030 37921
www.camozzi.com

Customer Service
Tel. +39 030 3792790
service@camozzi.com

Export Department
Tel. +39 030 3792262
sales@camozzi.com

CAMOZZI
Automation

Our catalogues

Pneumatic actuation

1 Cylinders according standards
2 Compact cylinders
3 Stainless steel cylinders
4 Guided cylinders
5 Cylinders not according standards
6 Rotary cylinders
7 Rodless cylinders
8 Proximity switches
9 Clamping elements and shock absorbers

Fieldbus and multipole systems

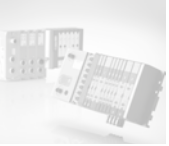

1 Valve islands
2 Multi-serial modules

Electric actuation

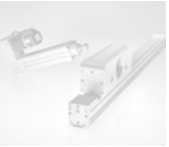

1 Electromechanical cylinders
2 Electromechanical axes
3 Drives
4 Motors

Proportional technology

1 Proportional valves
2 Proportional regulators

Handling and vacuum

1 Grippers
2 Suction pads
3 Ejectors
4 Vacuum accessories
5 Vacuum filters

Air treatment

1 Series MX Modular FRL Units
2 Series MC Modular FRL Units
3 Series MD Modular FRL Units
4 Series N FRL Units
5 Pressure regulators
6 Pressure switches and vacuum switches
7 Accessories for air treatment

Valves and solenoid valves

1 Directly and indirectly operated 2/2, 3/2 solenoid valves
2 Solenoid valves, pneumatic valves
3 Mechanical and manual valves
4 Logic valves
5 Automatic valves
6 Flow control valves
7 Silencers

Pneumatic connection

1 Super-rapid fittings
2 Rapid fittings
3 Universal fittings
4 Fittings accessories
5 Quick-release couplings
6 Tubing, spirals and accessories

General index

1 Proportional valves

2 Proportional regulators

Appendix

Alphanumeric index

Series AP directly operated proportional valves

2/2-way proportional valves, NC
Sizes: 16 - 22 mm

- » PWM or current operation
- » Open loop flow control
- » Also suitable for use with vacuum

Several versions available:

- » with body in PVDF (size 16mm only),
- » with rear flanged bodies
- » with lower flanged bodies,
- » suitable for use with oxygen
- » Seals in FKM, NBR and EPDM

Series AP directly operated 2/2-way proportional solenoid valves, NC, with nominal diameters range from 0.8 to 2.4 mm, can be used where an open loop flow control is required, with gas mixtures, to control free flows or blows, or emptying chambers using vacuum.

Series AP proportional valves have been manufactured to optimize and reduce friction and stick-slip effects. The output flow is proportional to the control signal. As they can work also in vacuum, a minimum working pressure is not required.

GENERAL DATA

Function	2/2 NC			
Operation	proportional directly operated			
Ports	M5 - G1/8 - with rear flanges - with lower flanges			
Hysteresis	Size 16mm: 12% FS - Size 22mm: 10% FS			
Repeatibility	Size 16mm: 7% FS - Size 22mm: 7% FS			
Operating temperature	0 ÷ 60°C			
Medium	filtered compressed air, unlubricated, according to ISO 8573-1 class 3.4.3, inert gas. All the valves are suitable for use with oxygen.			
Installation	any position			
Materials	body = brass / PVDF (size 16mm only) seals = NBR, FKM, EPDM			
	GP7	GPH	U711	U712
Nominal resistance	193 ohm	48 ohm	85 ohm	22 ohm
Rated current	125 mA	250 mA	271 mA	542 mA

NOTE: Having a counterpressure on the outlet connection of at least 25% of the inlet pressure ensures the good functioning of the valve and improves its performance. Example: with inlet Pressure = 1 bar on the outlet connection, a min. counterpressure of 250 mbar is recommended.

CODING EXAMPLE

AP	-	7	2	1	1	-	L	R	2	-	U	7	11		OX2

AP	SERIES		
7	BODY: 6 = size 16mm	7 = size 22mm	
2	NUMBER OF WAYS: 2 = 2-way		
1	VALVE FUNCTION: 1 = NC		
1	PORTS: 0 = M5 (size 16mm only) 1 = G1/8 (size 22mm only)	4 = with rear flanges (size 16mm only) 5 = with lower flanges	L = male hose adaptor (for body in PVDF only, size 16mm)
L	ORIFICE: D = ø 0.8 mm (size 16mm only) F = ø 1 mm	H = ø 1.2 mm L = ø 1.6 mm	N = ø 2 mm (size 22mm only) Q = ø 2.4 mm (size 22mm only)
R	SEAL MATERIAL: R = NBR	W = FKM	E = EPDM
2	BODY MATERIAL: 2 = brass	3 = PVDF (size 16mm only)	
U	ENCAPSULATING MATERIAL: G = PA (size 16mm only)	U = PET (size 22mm only)	
7	SOLENOID DIMENSIONS: P = 16x26 DIN EN 175301-803-C (size 16mm only)	7 = 22x22 DIN 43650 B (size 22mm only)	
11	SOLENOID VOLTAGE: H = 12 V DC 3 W (size 16mm only) 7 = 24 V DC 3 W (size 16mm only)	11 = 24 V DC 6.5 W (size 22mm only) 12 = 12 V DC 6.5 W (size 22mm only)	
	COIL ORIENTATION: = fastons opposite to pneumatic ports/same side of the outlet 5 = fastons towards pneumatic ports/same side of the inlet		
OX2	VERSION: OX2 = version with ASTM G93-03 Certification Level B (FKM seals only) = non-certified version		

FLOW GRAPH

Flow characteristic curve of a proportional valve

Q = flow
D.C. = duty cycle

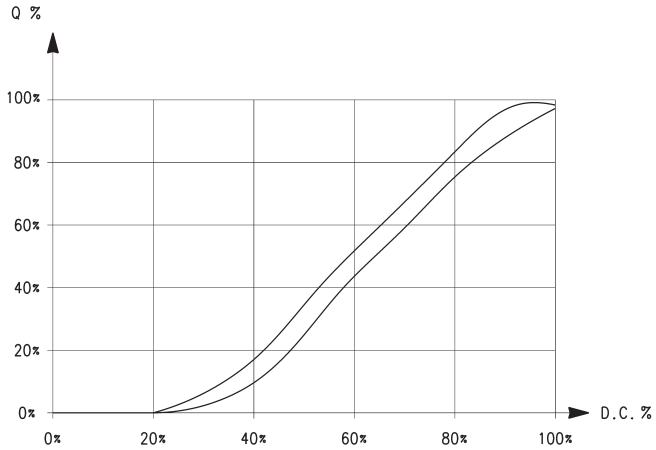

FLOW DIAGRAMS - size 16mm

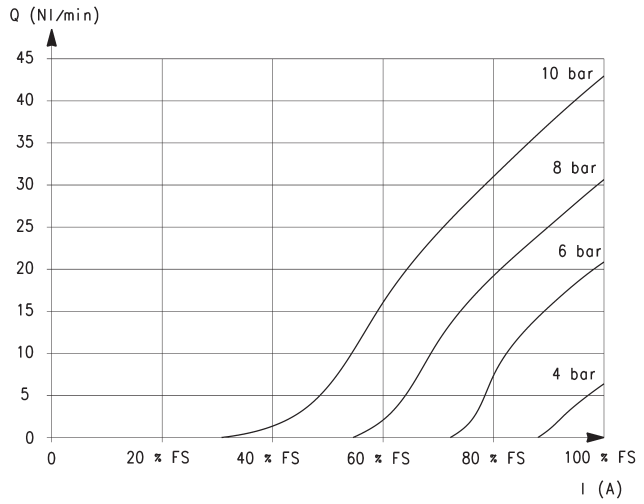

Nozzle 0.8mm

Q = Flow (Nl/min)
I = Current (A)
FS = Full scale

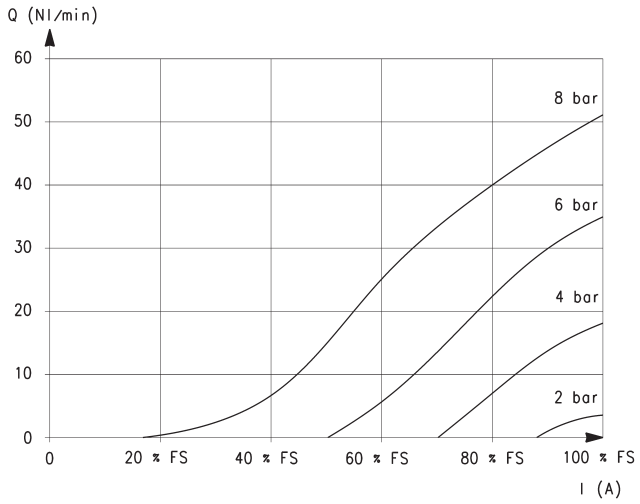

Nozzle 1mm

Q = Flow (Nl/min)
I = Current (A)
FS = Full scale

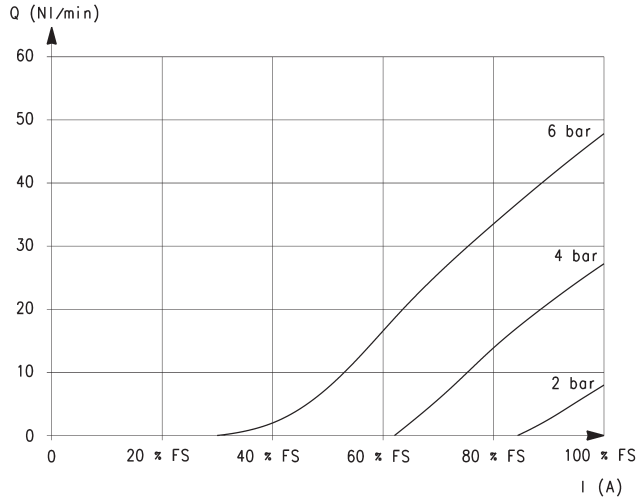

Nozzle 1.2mm

Q = Flow (Nl/min)
I = Current (A)
FS = Full scale

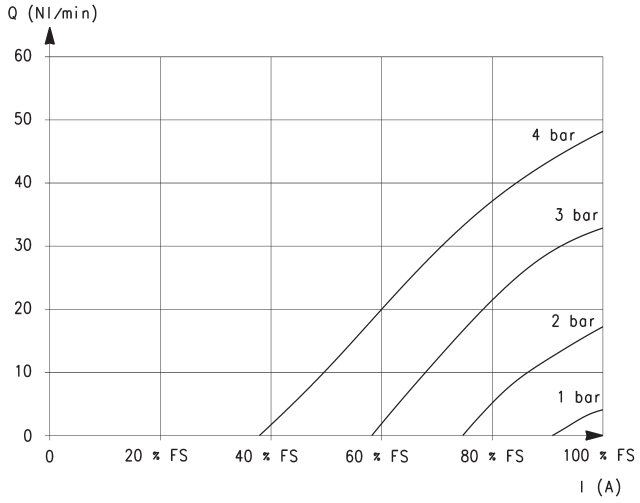

Nozzle 1.6mm

Q = Flow (Nl/min)
I = Current (A)
FS = Full scale

FLOW DIAGRAMS - size 22mm

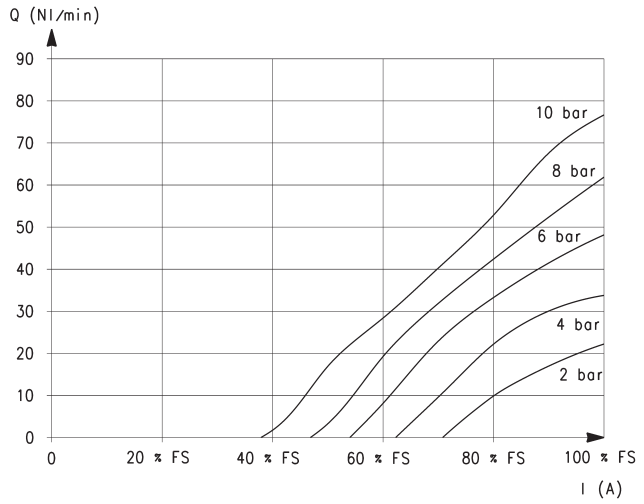

Nozzle 1mm

Q = Flow (Nl/min)
I = Current (A)
FS = Full scale

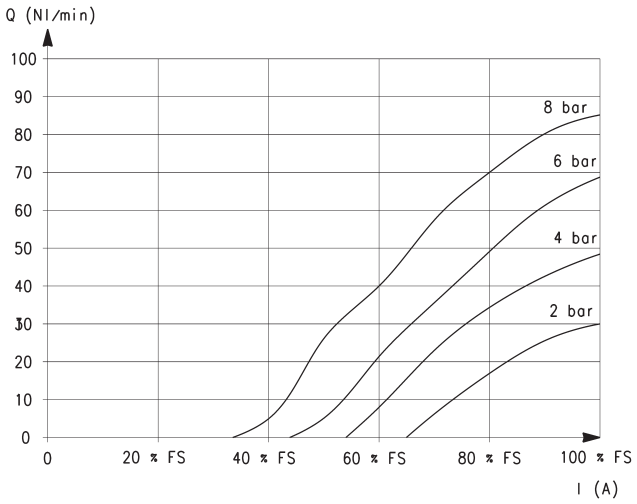

Nozzle 1.2mm

Q = Flow (Nl/min)
I = Current (A)
FS = Full scale

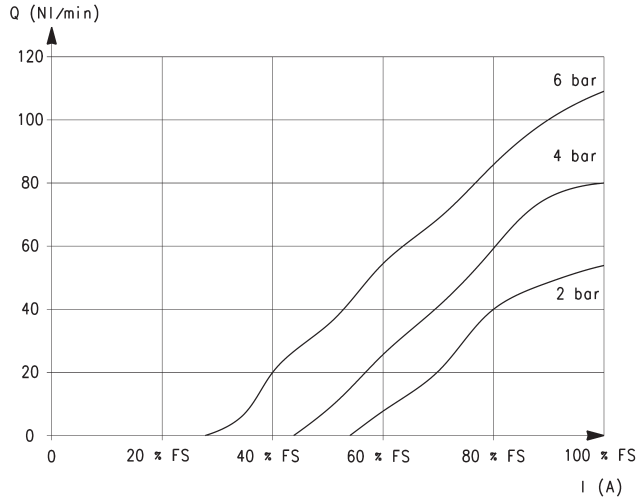

Nozzle 1.6mm

Q = Flow (Nl/min)
I = Current (A)
FS = Full scale

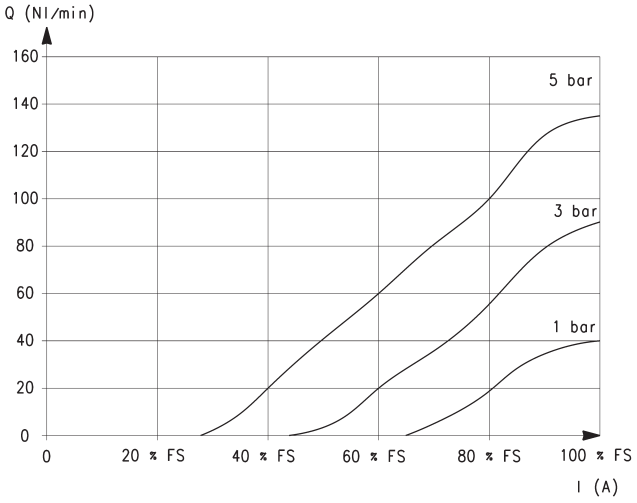

Nozzle 2mm

Q = Flow (Nl/min)
I = Current (A)
FS = Full scale

FLOW DIAGRAM - size 22mm

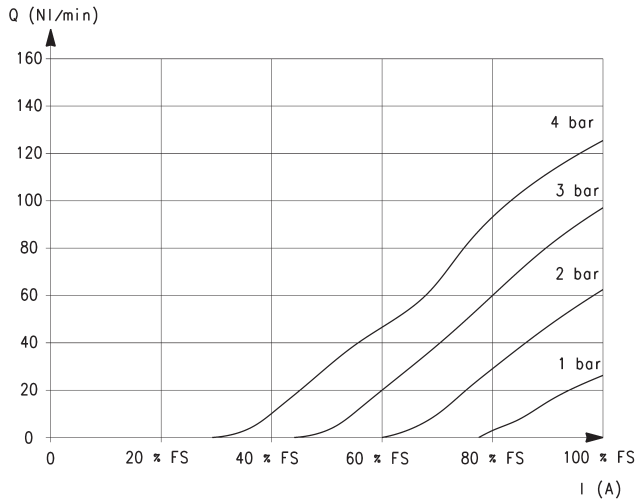

Nozzle 2.4mm

Q = Flow (Nl/min)
I = Current (A)
FS = Full scale

MAXIMUM FLOW AND RESPONSE TIMES - size 16mm

Maximum flow according to the set pressure, for each orifice.

DIAGRAM LEGEND:

Q = flow (Nl/min)
P = set pressure (bar)

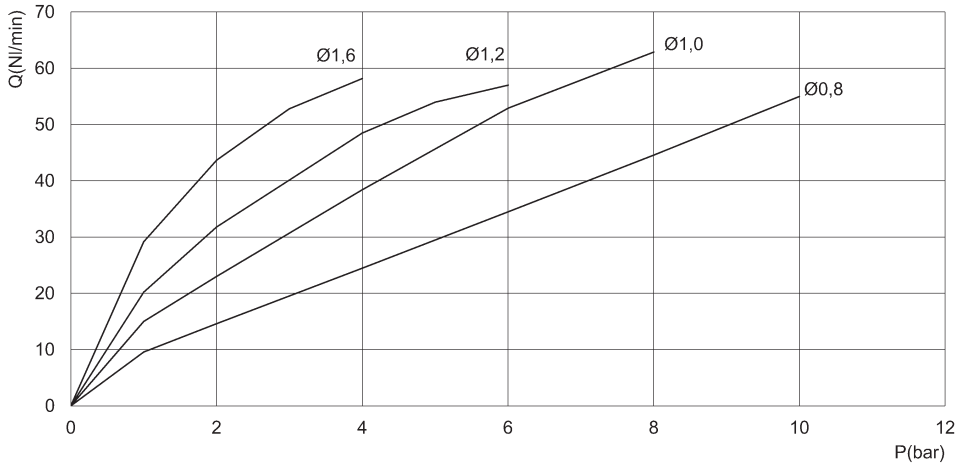

RESPONSE TIMES calculated according to the maximum flow at each operating pressure. [Electromechanical response time: 10 ms]							
ø	Pin [bar]	Load response time [ms]			Exhaust response time [ms]		
		0% - 10%	0% - 90%	10% - 90%	100% - 90%	100% - 10%	90% - 10%
0.8 mm	10	12	43	31	11	39	28
1 mm	8	12	42	30	11	38	27
1.2 mm	6	10	41	31	11	41	30
1.6 mm	4	10	40	30	11	40	29

MAXIMUM FLOW AND RESPONSE TIMES - size 22mm

Maximum flow according to the set pressure, for each orifice.

DIAGRAM LEGEND:

Q = flow (Nl/min)
P = set pressure (bar)

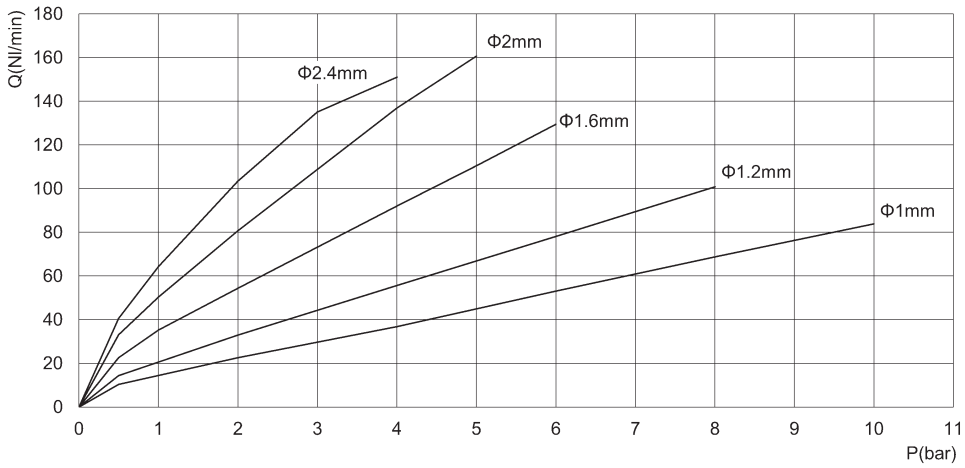

RESPONSE TIMES calculated according to the maximum flow at each operating pressure. [Electromechanical response time: 10 ms]							
ø	Pin [bar]	Load response time [ms]			Exhaust response time [ms]		
		0% - 10%	0% - 90%	10% - 90%	100% - 90%	100% - 10%	90% - 10%
1 mm	10	10	36	26	10	36	26
1.2 mm	8	10	45	35	12	38	26
1.6 mm	6	12	45	33	12	40	28
2 mm	5	12	42	30	11	34	26
2.4 mm	4	11	45	34	12	44	32

Series AP proportional valves - 22mm, body with threaded ports

For the use with vacuum connect the line to port 2.

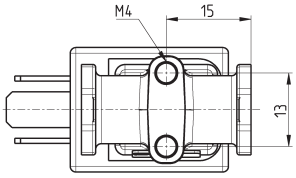

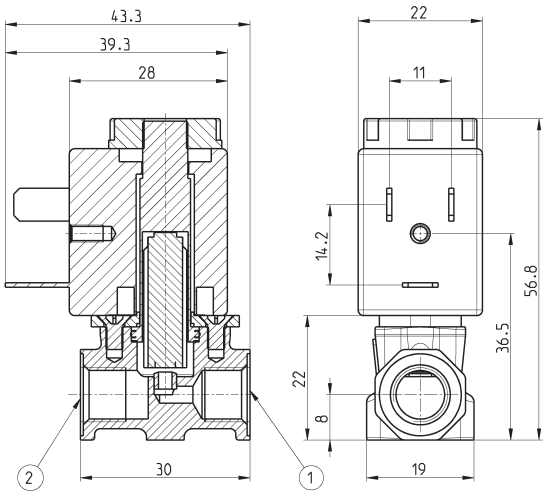

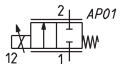

Mod.	Port 1	Port 2	Function	Orifice Ø (mm)	kv (l/min)	Max pressure (bar)	Max flow (Nl/min)
AP-7211-FR2-U7*	G1/8	G1/8	2/2 NC	1	0.5	10	75
AP-7211-HR2-U7*	G1/8	G1/8	2/2 NC	1.2	0.7	8	85
AP-7211-LR2-U7*	G1/8	G1/8	2/2 NC	1.6	1.2	6	110
AP-7211-NR2-U7*	G1/8	G1/8	2/2 NC	2	1.7	5	135
AP-7211-QR2-U7*	G1/8	G1/8	2/2 NC	2.4	1.7	4	113
AP-7211-FW2-U7*OX2	G1/8	G1/8	2/2 NC	1	0.5	10	75
AP-7211-HW2-U7*OX2	G1/8	G1/8	2/2 NC	1.2	0.7	8	85
AP-7211-LW2-U7*OX2	G1/8	G1/8	2/2 NC	1.6	1.2	6	110
AP-7211-NW2-U7*OX2	G1/8	G1/8	2/2 NC	2	1.7	5	135
AP-7211-QW2-U7*OX2	G1/8	G1/8	2/2 NC	2.4	1.7	4	113

* choose the desired voltage

Series AP proportional valves - size 22mm, low flanged body

For the use with vacuum connect the line to port 2.

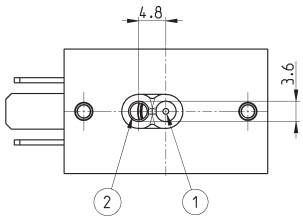

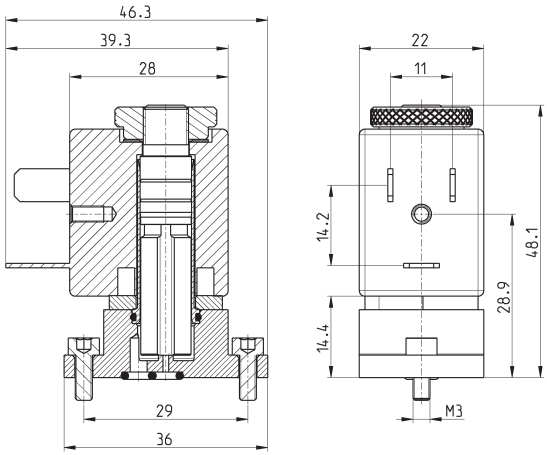

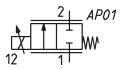

Mod.	Function	Orifice Ø (mm)	kv (l/min)	Max pressure (bar)	Max flow (Nl/min)
AP-7215-FR2-U7*	2/2 NC	1	0.5	10	75
AP-7215-HR2-U7*	2/2 NC	1.2	0.7	8	85
AP-7215-LR2-U7*	2/2 NC	1.6	1.2	6	110
AP-7215-NR2-U7*	2/2 NC	2	1.7	5	135
AP-7215-QR2-U7*	2/2 NC	2.4	1.7	4	113
AP-7215-FW2-U7*OX2	2/2 NC	1	0.5	10	75
AP-7215-HW2-U7*OX2	2/2 NC	1.2	0.7	8	85
AP-7215-LW2-U7*OX2	2/2 NC	1.6	1.2	6	110
AP-7215-NW2-U7*OX2	2/2 NC	2	1.7	5	135
AP-7215-QW2-U7*OX2	2/2 NC	2.4	1.7	4	113

* choose the desired voltage

Series AP proportional valves - 16mm, body with threaded ports

For the use with vacuum connect the line to port 2.

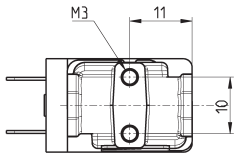

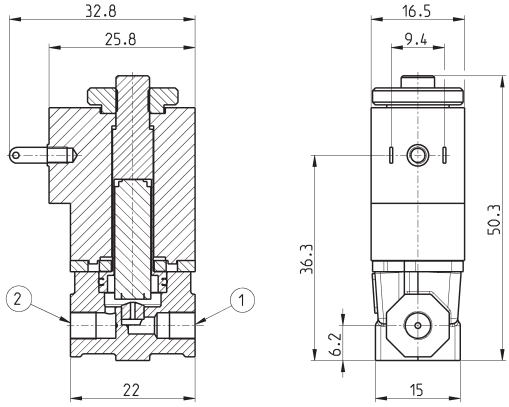

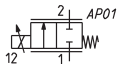

Mod.	Port 1	Port 2	Function	Orifice Ø (mm)	kv (l/min)	Max pressure (bar)	Max flow (Nl/min)
AP-6210-DR2-GP*	M5	M5	2/2 NC	0.8	0.3	10	43
AP-6210-FR2-GP*	M5	M5	2/2 NC	1	0.45	8	53
AP-6210-HR2-GP*	M5	M5	2/2 NC	1.2	0.57	6	53
AP-6210-LR2-GP*	M5	M5	2/2 NC	1.6	0.78	4	52
AP-6210-DW2-GP*OX2	M5	M5	2/2 NC	0.8	0.3	10	43
AP-6210-FW2-GP*OX2	M5	M5	2/2 NC	1	0.45	8	53
AP-6210-HW2-GP*OX2	M5	M5	2/2 NC	1.2	0.57	6	53
AP-6210-LW2-GP*OX2	M5	M5	2/2 NC	1.6	0.78	4	52

* choose the desired voltage

Series AP proportional valves - 16mm, low flanged body

For the use with vacuum connect the line to port 2.

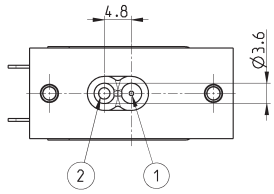

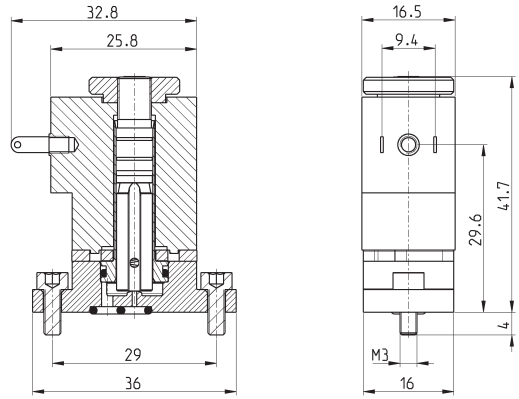

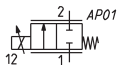

Mod.	Function	Orifice Ø (mm)	kv (l/min)	Max pressure (bar)	Max flow (Nl/min)
AP-6215-DR2-GP*	2/2 NC	0.8	0.3	10	43
AP-6215-FR2-GP*	2/2 NC	1	0.45	8	53
AP-6215-HR2-GP*	2/2 NC	1.2	0.57	6	53
AP-6215-LR2-GP*	2/2 NC	1.6	0.78	4	52
AP-6215-DW2-GP*OX2	2/2 NC	0.8	0.3	10	43
AP-6215-FW2-GP*OX2	2/2 NC	1	0.45	8	53
AP-6215-HW2-GP*OX2	2/2 NC	1.2	0.57	6	53
AP-6215-LW2-GP*OX2	2/2 NC	1.6	0.78	4	52

* choose the desired voltage

Series AP proportional valves - 16mm, rear flanged body

For the use with vacuum connect the line to port 2.

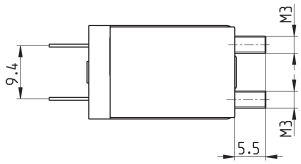

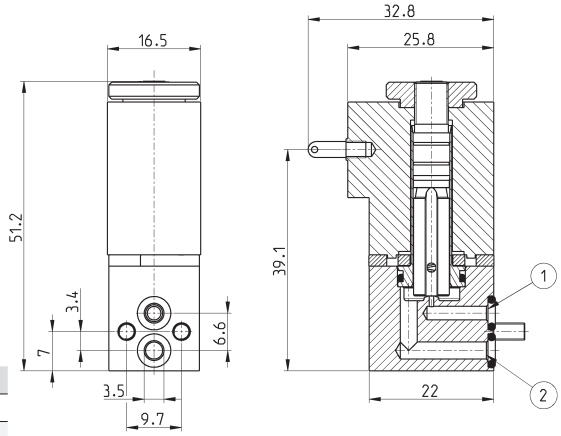

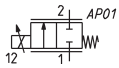

Mod.	Function	Orifice Ø (mm)	kv (l/min)	Max pressure (bar)	Max flow (Nl/min)
AP-6214-DR2-GP*	2/2 NC	0.8	0.3	10	43
AP-6214-FR2-GP*	2/2 NC	1	0.45	8	53
AP-6214-HR2-GP*	2/2 NC	1.2	0.57	6	53
AP-6214-LR2-GP*	2/2 NC	1.6	0.78	4	52
AP-6214-DW2-GP*OX2	2/2 NC	0.8	0.3	10	43
AP-6214-FW2-GP*OX2	2/2 NC	1	0.45	8	53
AP-6214-HW2-GP*OX2	2/2 NC	1.2	0.57	6	53
AP-6214-LW2-GP*OX2	2/2 NC	1.6	0.78	4	52

* choose the desired voltage

Series AP proportional valves, size 16mm - body in PVDF

For the use with vacuum connect the line to port 2.

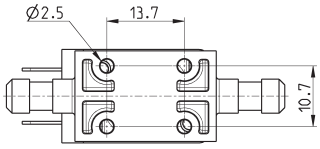

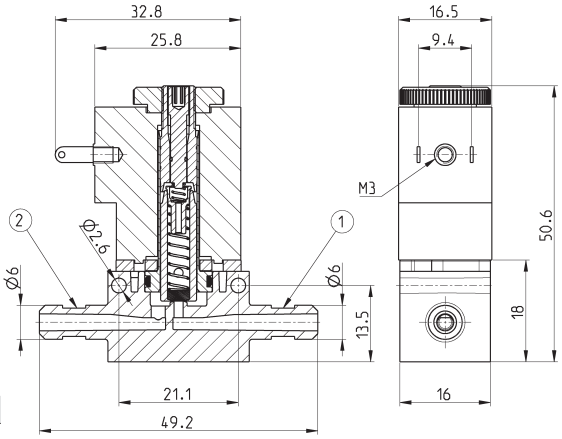

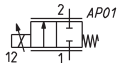

Mod.	Port 1	Port 2	Function	Orifice Ø (mm)	kv (l/min)	Max pressure (bar)	Max flow (Nl/min)
AP-621L-DR3-GP*	Ø6 **	Ø6 **	2/2 NC	0.8	0.3	10	43
AP-621L-FR3-GP*	Ø6 **	Ø6 **	2/2 NC	1	0.45	8	53
AP-621L-HR3-GP*	Ø6 **	Ø6 **	2/2 NC	1.2	0.57	6	53
AP-621L-LR3-GP*	Ø6 **	Ø6 **	2/2 NC	1.6	0.78	4	52
AP-621L-DW3-U7*OX2	Ø6 **	Ø6 **	2/2 NC	0.8	0.3	10	43
AP-621L-FW3-U7*OX2	Ø6 **	Ø6 **	2/2 NC	1	0.45	8	53
AP-621L-HW3-U7*OX2	Ø6 **	Ø6 **	2/2 NC	1.2	0.57	6	53
AP-621L-LW3-U7*OX2	Ø6 **	Ø6 **	2/2 NC	1.6	0.78	4	52

* choose the desired voltage
** pneumatic connection with tube and clamps

Connector Mod. 125-800 DIN 43650 pitch 9.4 mm

For size 16 mm only

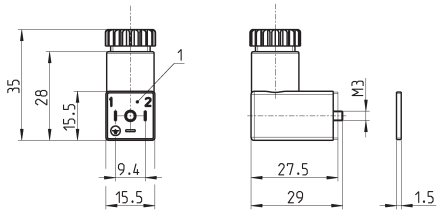

Mod.	description	colour	working voltage	cable holding	tightening torque
125-800	connector, without electronics	black	-	PG7	0.3 Nm

1 = 90° adjustable connector

Connector Mod. 125-550- DIN 43650 pitch 9.4 mm with cable

For size 16 mm only

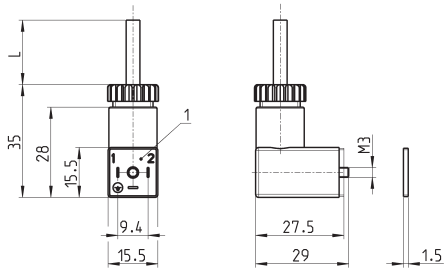

Mod.	description	colour	working voltage	cable length [L]	cable holding	tightening torque
125-550-1	moulded cable, without electronics	black	-	1000 mm	-	0.3 Nm

1 = 90° adjustable connector

In-line connectors with cable Mod. 125-553

For size 16 mm only

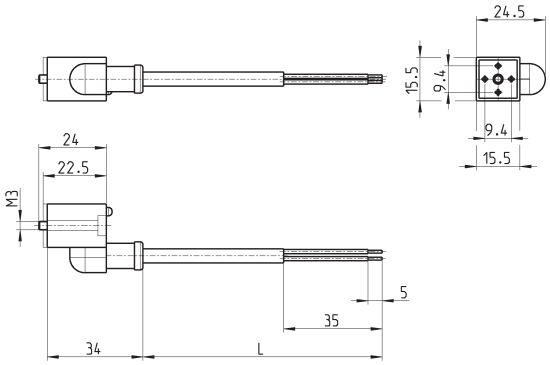

Mod.	description	colour	working voltage	cable length [L]	cable holding	tightening torque
125-553-2	in-line moulded cable, without electronics	black	-	2000 mm	-	0.3 Nm
125-553-5	in-line moulded cable, without electronics	black	-	5000 mm	-	0.3 Nm

Connectors Mod. 122-800 DIN 43650

For size 22 mm only

Mod. 122-800EX:
for ATEX certified solenoids Mod. U7*EX,
with anti-screwing off screw Mod. TORX.

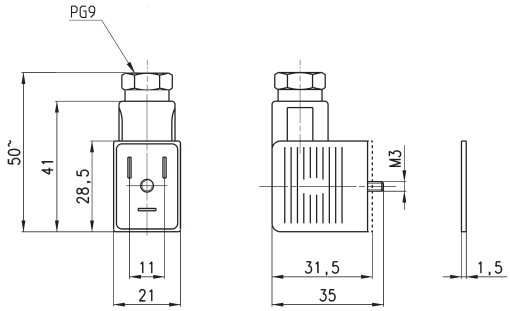

Mod.	description	colour	working voltage	cable holding	tightening torque
122-800	connector, without electronics	black	-	PG9	0.5 Nm
122-800EX	connector, without electronics	black	-	PG9	0.5 Nm

Connectors Mod. 122-550 DIN 43650 with cable

For size 22 mm only

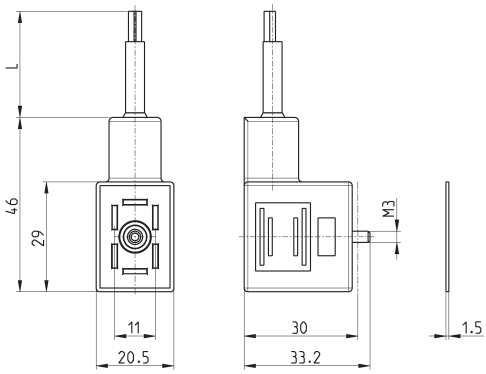

Mod.	description	colour	working voltage	cable length [L]	cable holding	tightening torque
122-550-1	moulded cable, without electronics	black	-	1000 mm	-	0.5 Nm
122-550-5	moulded cable, without electronics	black	-	5000 mm	-	0.5 Nm

Series CP directly operated and pressure compensated proportional solenoid valves

New models

Function: 2/2-way NC
Sizes: 16 and 20 mm

- High flow and great precision
- Low hysteresis
- Cartridge body
- Pressure compensated version (size 20mm only) available
- Suitable to work also with oxygen

Series CP directly operated proportional solenoid valves can be used where an open loop flow control is required, with gas mixtures or to control flows.
Their cartridge design makes them particularly compact, thus they can be mounted directly near the workstation.

Series CP valves have been designed to optimize dimensions and reduce friction and stick-slip effects. The output flow is proportional to the control signal.
Apart from the pressure compensated version, these valves can work also in vacuum. A minimum working pressure is thus not required.

GENERAL DATA

TECHNICAL FEATURES	Size 16mm, 2/2 NC	Size 20mm, 2/2 NC	Size 20mm, 2/2 NC pressure compensated
Operation	proportional directly operated cartridge	proportional directly operated cartridge	proportional pressure compensated cartridge
Pneumatic connections	1 mm - 1.5 mm - 2 mm	3 mm - 3.5 mm	4.4 mm
Nominal diameters	70 Nl/min - 80 Nl/min - 90 Nl/min	145 Nl/min - 165 Nl/min	200 l/min
Free flow capacity	3 bar - 5 bar - 8 bar	2.8 bar - 2 bar	2.8 bar (max pressure 6 bar)
Operating pressure	16 bar	16 bar	16 bar
Max overpressure	3% FS	5% FS	2% FS
Linearity (5-95%)	10% FS	15% FS	15% FS
Hysteresis	5% FS	5% FS	5% FS
Repeatibility	10°C ÷ 50°C	10°C ÷ 50°C	10°C ÷ 50°C
Operating temperature	filtered compressed air, unlubricated, according to ISO 8573-1 class 7.4.4, inert gas.	filtered compressed air, unlubricated, according to ISO 8573-1 class 7.4.4, inert gas.	filtered compressed air, unlubricated, according to ISO 8573-1 class 7.4.4, inert gas.
Media	in any position	in any position	in any position
Installation			
MATERIALS IN CONTACT WITH THE MEDIUM			
Body	brass, stainless steel, PPS	brass, stainless steel, PPS	brass, stainless steel, PPS
Seals	FKM	FKM	FKM
ELECTRICAL FEATURES			
Operation	PWM > 1000 Hz or current control	PWM > 500 Hz or current control	PWM > 1000 Hz or current control
Operation voltage	6 V DC, 12 V DC, 24 V DC	6 V DC, 12 V DC, 24 V DC	6 V DC, 12 V DC, 24 V DC
Max power consumption	3.1 W	5 W, 3.7 W	4.2 W
Nominal resistance	11.8 Ohm - 37.6 Ohm - 184.7 Ohm	5.4 Ohm, 21.6 Ohm, 86.4 Ohm, 6.4 Ohm, 25.1 Ohm, 102.1 Ohm	6.4 Ohm, 25.1 Ohm, 102.1 Ohm
Rated current	410 mA, 238 mA, 103 mA	820 mA, 410 mA, 205 mA	700 mA, 350 mA, 175 mA
Duty cycle	100% with air flow	100% with air flow	100% with air flow
Electrical connection	cable 300mm AWG24	cable 300mm AWG24	cable 300mm AWG24
Protection class	IP00 / IP40	IP00 / IP40	IP00 / IP40
Average lifecycles	50000000	50000000	50000000
Command signal	recommended PWM: 1000 Hz	recommended PWM: 500 Hz	recommended PWM: 1000 Hz

Versions available on demand base with 1/8, 1/4 ports

CODING EXAMPLE

CP	-	C	6	2	1	-	G	W	2	-	0	P	3

CP	SERIES		
C	PORTS: C = cartridge S = subbase		
6	BODY SIZE: 6 = size 16mm	7 = size 20mm	9 = size 20mm pressure compensated
2	NUMBER OF PORTS: 2 = 2-way		
1	FUNCTION: 1 = NC		
G	ORIFICE DIAMETRES: F = 1mm (size 16mm only) G = 1.5mm (size 16mm only) N = 2mm (size 16mm only)	M = 3mm (size 20mm only) P = 3.5mm (size 20mm only)	T = ø 4.4 mm (size 20mm only, pressure compensated)
W	SEAL MATERIAL: W = FKM		
2	BODY MATERIAL: 2 = BRASS		
0	OVERMOULDING MATERIAL OF COIL: 0 = cartridge		
P	COIL DIMENSIONS: P = ø 16 7 = ø 20		
3	VOLTAGE: 1 = 6 V DC 3.1 W (size 16mm only) 3 = 24 V DC 3.1 W (size 16mm only) 5 = 12 V DC 3.1 W (size 16mm only)	2 = 12 V DC 4.3 W (size 20mm only) 4 = 24 V DC 4.3 W (size 20mm only) 6 = 6 V DC 4.3 W (size 20mm only) 7 = 6 V 4.8 W (only Ø 3.5, size 20mm) 8 = 12 V 4.8 W (only Ø 3.5, size 20mm) 9 = 24 V 4.8 W (only Ø 3.5, size 20mm)	10 = 6 V DC 4.2 W (size 20mm only, pressure compensated) 11 = 24 V DC 4.2 W (size 20mm only, pressure compensated) 12 = 12 V DC 4.2 W (size 20mm only, pressure compensated)

HYSTERESIS AND RESPONSE TIMES

DIAGRAM LEGEND:

Q = flow (l/min)
I = current (A)
FS = full scale

NOTE TO THE TABLE:
* in the pressure compensated version the counter pressure at the valve outlet must be always lower than 15-20% of the inlet pressure.

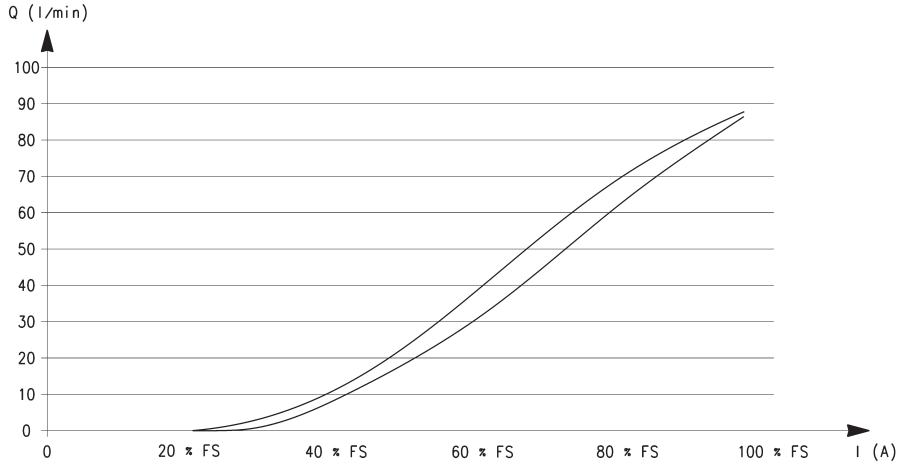

RESPONSE TIMES calculated according to the maximum flow at each operating pressure. [Electromechanical response time: 10 ms]

ø	Inlet pressure (bar)	Load response time (ms)			Exhaust response time (ms)		
		0% - 10%	0% - 90%	10% - 90%	100% - 90%	100% - 10%	90% - 10%
1 mm	8	12	42	30	9	33	24
1.5 mm	5	12	39	27	9	33	24
2 mm	3	11	39	28	9	33	26
3 mm	2.8	13	29	16	14	28.5	14.5
3.5 mm	2	15	31	16	12.5	27.5	15
4.4 mm *	2.8	13	52	49	10	37	27

FLOW DIAGRAMS - Size 16mm

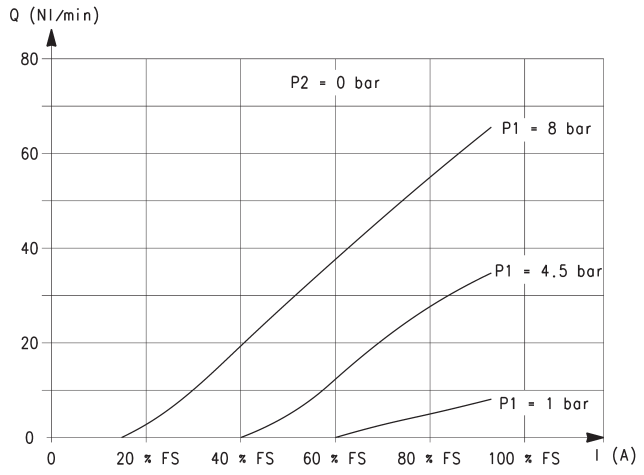

Nominal diameter 1mm

Q = flow (l/min)
I = current (A)
P1 = pressure in load (bar)
P2 = 0 [free flow pressure] (bar)

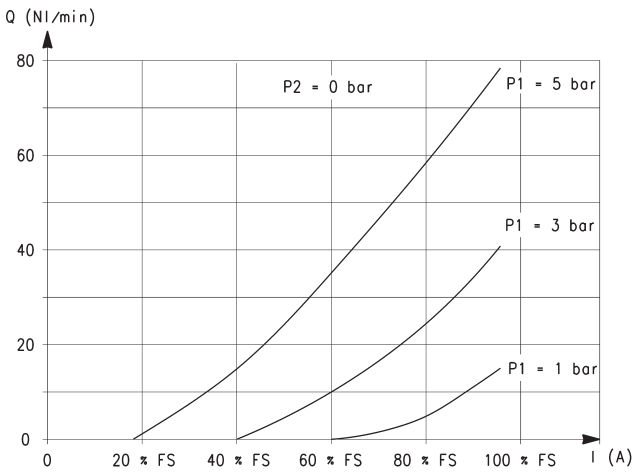

Nominal diameter 1.5mm

Q = flow (l/min)
I = current (A)
P1 = pressure in load (bar)
P2 = 0 [free flow pressure] (bar)

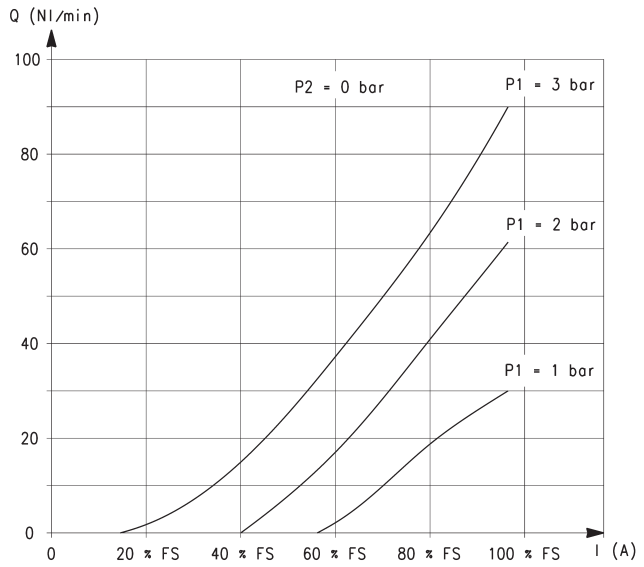

Nominal diameter 2mm

Q = flow (l/min)
I = current (A)
P1 = pressure in load (bar)
P2 = 0 [free flow pressure] (bar)

FLOW DIAGRAMS - Size 20mm

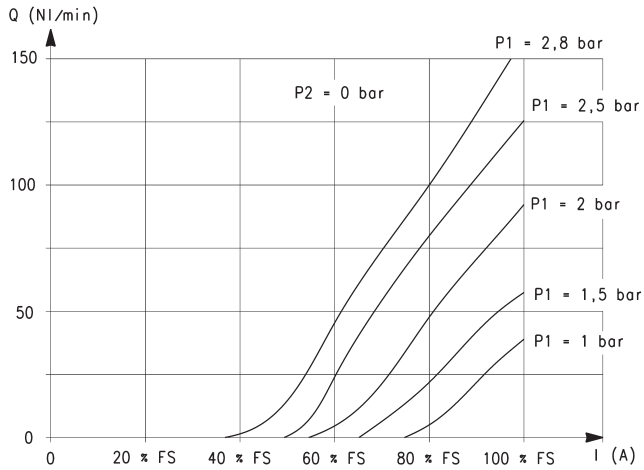

Nominal diameter 3mm

Q = flow (l/min)
I = current (A)
P1 = pressure in load (bar)
P2 = 0 [free flow pressure] (bar)

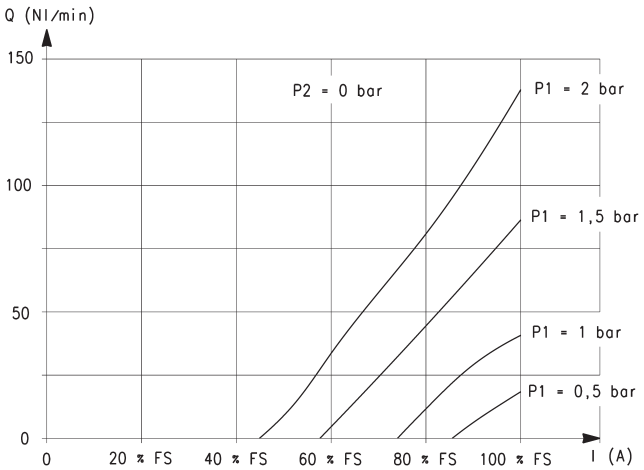

Nominal diameter 3.5mm

Q = flow (l/min)
I = current (A)
P1 = pressure in load (bar)
P2 = 0 [free flow pressure] (bar)

FLOW DIAGRAMS - Size 20mm pressure compensated

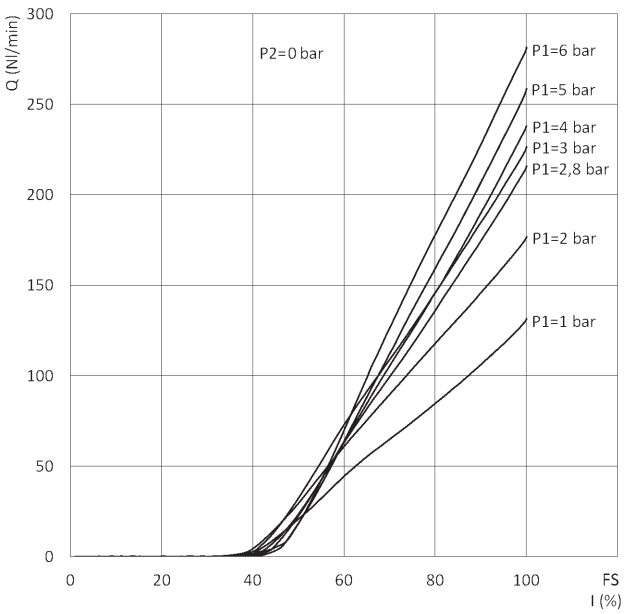

Nominal diameter 4.4mm

Q = flow (l/min)
I = current (A)
P1 = pressure in load (bar)
P2 = 0 [free flow pressure] (bar)
FS = full scale

MAXIMUM FLOW ACCORDING TO THE INLET PRESSURE

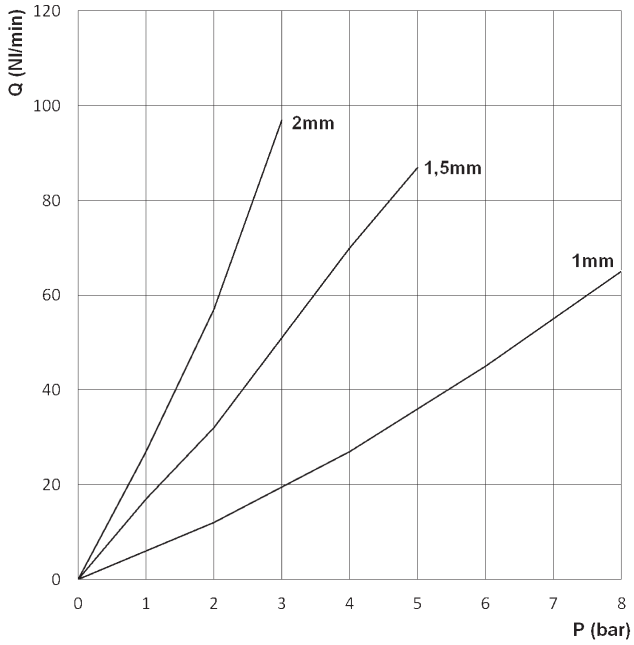

Size 16 mm

Q = Flow (Nl/min)
P = Inlet pressure (bar)

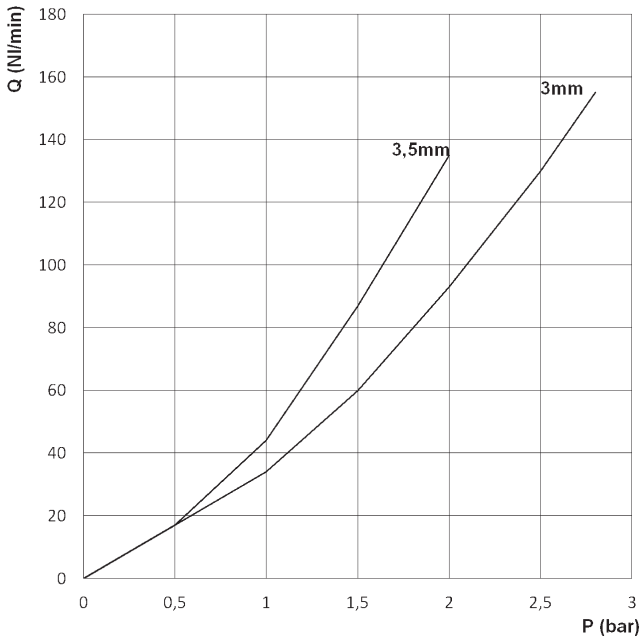

Size 20 mm

Q = Flow (Nl/min)
P = Inlet pressure (bar)

MAXIMUM FLOW ACCORDING TO THE INLET PRESSURE

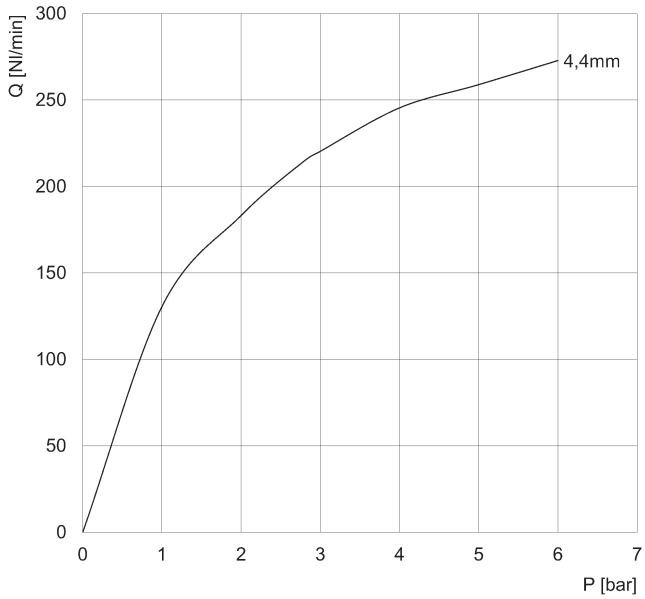

Size 20mm pressure compensated

Q = Flow (Nl/min)
P = Inlet pressure (bar)

Solenoid valves, size 16mm

Out of stock version

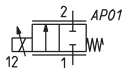

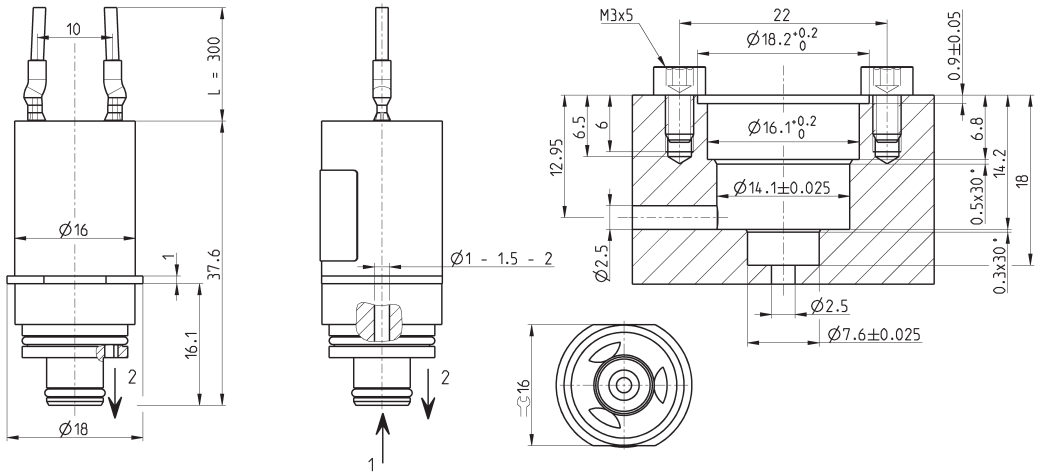

Mod.	Orifice Ø (mm)	Max operating pressure (bar)	Max flow (Nl/min)	Max flow kv (l/min)	Operation voltage (V DC)	Max current (mA)
CP-C621-FW2-OP1	1	8	70	0.55	6	410
CP-C621-GW2-OP1	1.5	5	80	0.88	6	410
CP-C621-NW2-OP1	2	3	90	1.42	6	410
CP-C621-FW2-OP3	1	8	70	0.55	24	103
CP-C621-GW2-OP3	1.5	5	80	0.88	24	103
CP-C621-NW2-OP3	2	3	90	1.42	24	103
CP-C621-FW2-OP5	1	8	70	0.55	12	238
CP-C621-GW2-OP5	1.5	5	80	0.88	12	238
CP-C621-NW2-OP5	2	3	90	1.42	12	238

Solenoid valves, size 16m

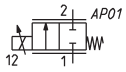

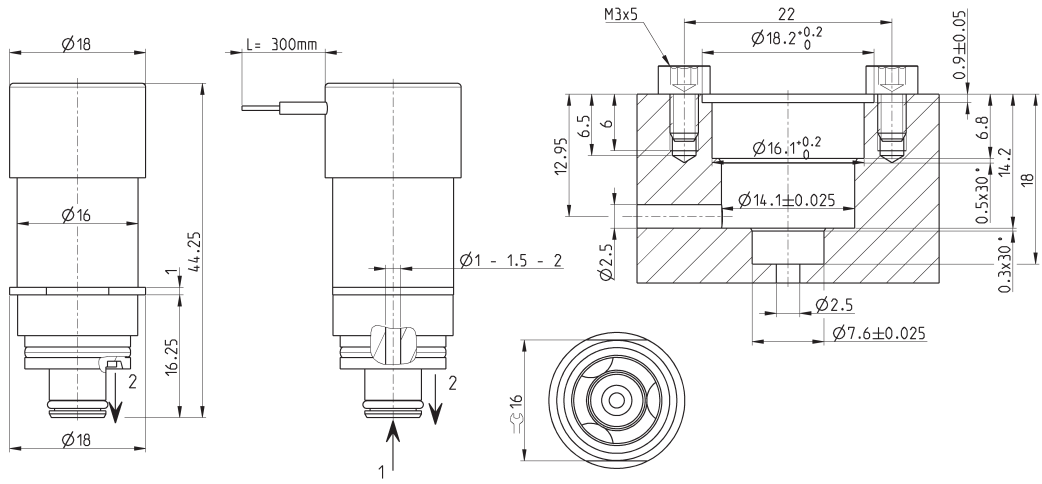

Mod.	Orifice Ø (mm)	Max operating pressure (bar)	Max flow (Nl/min)	Max flow kv (l/min)	Operation voltage (V DC)	Max current (mA)
CPN-C621-FW2-OP1	1	8	70	0.55	6	410
CPN-C621-GW2-OP1	1.5	5	80	0.88	6	410
CPN-C621-NW2-OP1	2	3	90	1.42	6	410
CPN-C621-FW2-OP3	1	8	70	0.55	24	103
CPN-C621-GW2-OP3	1.5	5	80	0.88	24	103
CPN-C621-NW2-OP3	2	3	90	1.42	24	103
CPN-C621-FW2-OP5	1	8	70	0.55	12	238
CPN-C621-GW2-OP5	1.5	5	80	0.88	12	238
CPN-C621-NW2-OP5	2	3	90	1.42	12	238

Solenoid valves, size 20mm

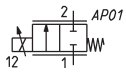

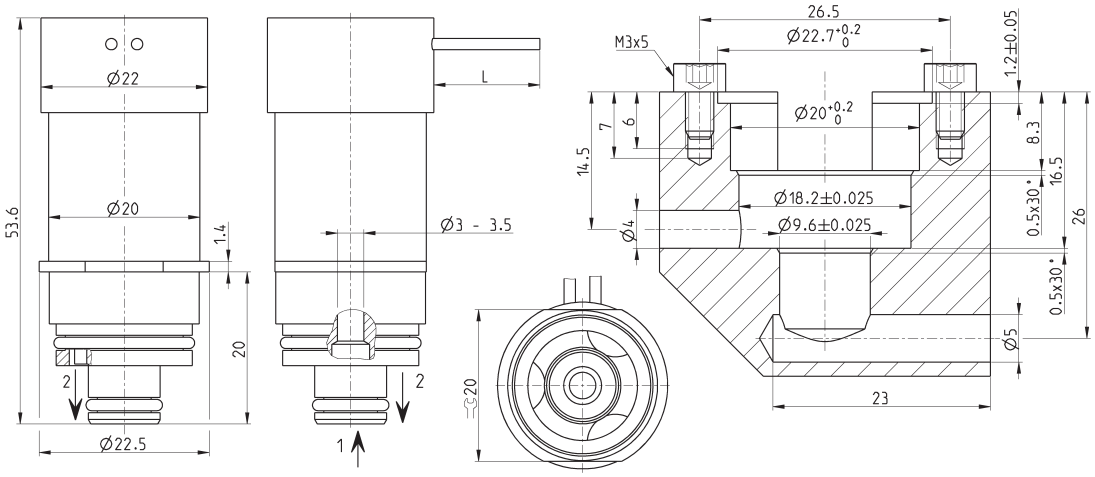

Mod.	Orifice Ø (mm)	Max operating pressure (bar)	Max flow (Nl/min)	Max flow kv (l/min)	Operation voltage (V DC)	Max current (mA)
CP-C721-MW2-072	3	2.8	150	2.8	12	313
CP-C721-MW2-074	3	2.8	150	2.8	24	154
CP-C721-MW2-076	3	2.8	150	2.8	6	615
CP-C721-PW2-072	3.5	2	130	3	12	313
CP-C721-PW2-074	3.5	2	130	3	24	154
CP-C721-PW2-076	3.5	2	130	3	6	615
CP-C721-PW2-077	3.5	2	180	4.5	6	820
CP-C721-PW2-078	3.5	2	180	4.5	12	410
CP-C721-PW2-079	3.5	2	180	4.5	24	205

Solenoid valves, size 20mm pressure compensated

New

Working nominal pressure: 2.8 bar

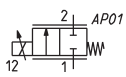

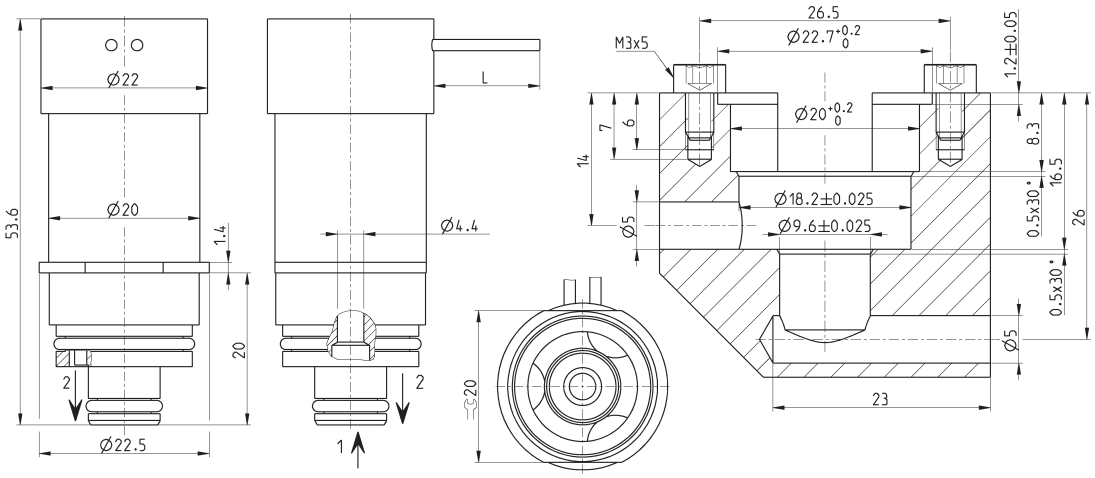

Mod.	Orifice Ø (mm)	Max operating pressure (bar)	Max flow (Nl/min)	Max flow kv (l/min)	Operation voltage (V DC)	Max current (mA)
CP-C921-TW2-0710	4.4	6	200	4	6	700
CP-C921-TW2-0711	4.4	6	200	4	24	175
CP-C921-TW2-0712	4.4	6	200	4	12	350

Sub-base

New

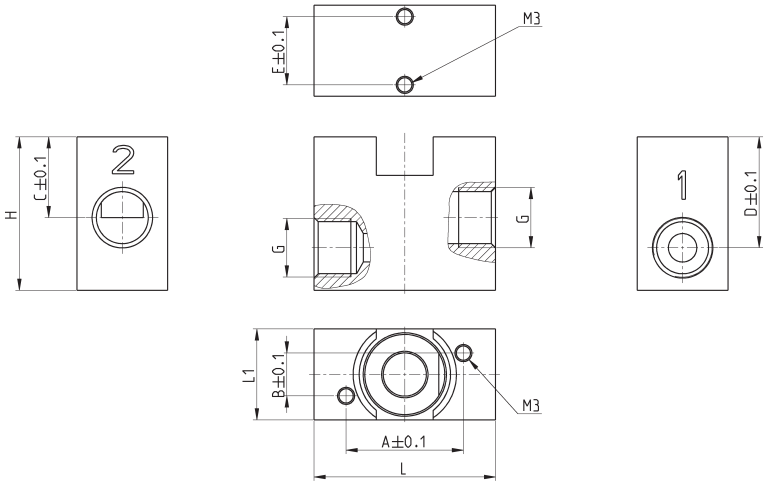

Mod.	Ø	A	B	C	D	E	G	H	L	L1
CP-S6	16	20.7	7.5	14.2	19.5	12	G1/8	27	32	16
CP-S7	20	25.2	8	14	22.5	15	G1/4	31.5	45	22

Series 130 electronic control device for proportional valves

PWM control device, with current control system for directly operated proportional valves

- Closed loop current control (max current that can be provided = 1A)
- Management of up and down ramp
- Command signal 0-10V and 4-20mA
- Regulation of min and max current (Span and Offset)

Series 130 electronic control device allows to pilot any proportional valve with a maximun current of 1 A.
It turns a standard inlet signal (0-10V or 4-20 mA) into a PWM signal to obtain at the solenoid outlet a current which is proportional to the inlet signal.

A control system of the provided current allows to compensate variations due to heating of the solenoid or to the variation of the supply voltage.It is possible to adjust the maximum and minimum current provided to the solenoid. The outlet signal can have a ramp progress that is adjustable between 0 and 5 s. The device has a firmware dedicated to the proportional valve to pilot in order to guarantee the best performance.

GENERAL DATA

Material of container	Polycarbonate
Electrical connections	screw
Environmental temperature	0 ÷ 50°C
Mounting	in any position
Power supply	6 V ÷ 24 V DC (± 10%)
Consumption	0.4 W (without valve)
Analogical input	0 ÷ 10 V 4 ÷ 20 mA
Input impedence	>30 Kohm with inlet under voltage <200 ohm with inlet under current
Output PWM	120 Hz ÷ 11.7 KHz (fixed, according to the valve chosen)
Maximum current (valve)	1 A
Protection	Polarity inversion, short circuit of the outlet
External diameter of cable jacket	5 ÷ 7.5 mm with seal only 4 ÷ 6 mm with reducer and seal
Conductor section	26 ÷ 16 AWG / 0,13 ÷ 1,5 mm2
Maximum length supply/signal cable	10 m
Maximum length valve cable	5 m
IP protection class according to EN 60529	IP 54
Ramp function	Adjustable time from 0 to 5 s
Regulation min. current (Offset)	0% ÷ 40% F.S.
Regulation maximum current	50% ÷ 100% F.S.

CODING EXAMPLE

130	-	2	2	2

130	SERIES
2	VOLTAGE: 2 = 24 V DC (max power 24 W) 3 = 12 V DC (max power 12 W) 4 = 6 V DC (max power 6 W) 5 = 11 V DC (max power 11 W)
2	POWER: 1 = 3 W 2 = 6.5 W 3 = 3.2 W 4 = 4.3 W 5 = 10 W 6 = 4.2 W
2	PWM FREQUENCY: 2 = 500 Hz 3 = 1 KHz

NOTE: it is possible to realize configurations with voltage, power and PWM frequency values that are not yet foreseen in the coding example.
For further information we suggest you to contact our technical department.

ELECTRICAL CONNECTIONS AND SETTINGS

DRAWING LEGEND:

1 = 6 ÷ 24 V DC (supply)
2 = 0 V (Ground) common also for the reference signal
3 = analogical reference signal 0 ÷ 10V DC
4 = analogical reference signal 4 ÷ 20 mA
A = regulation of min. current (OFFSET)
B = regulation of max. current (SPAN)
C = regulation of the PWM outlet up and down ramp
D = red LED
E = yellow LED

Note 1: the GND of the reference signal and the GND of supply have to be linked together.

Note 2: For the valve connection use a connector without protection - diodes, varistors, etc... - as these might alter the regulation of the device.

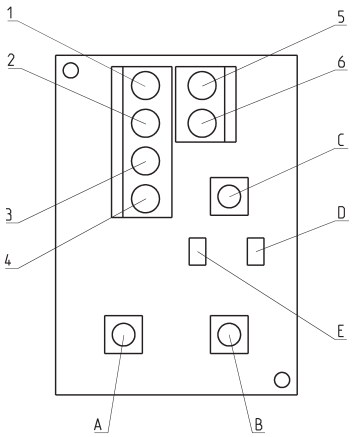

Series 130 electronic control device

NOTE: it is possible to realize configurations with voltage, power and PWM frequency values that are not shown in the table below. For further information we suggest you to contact our technical department.

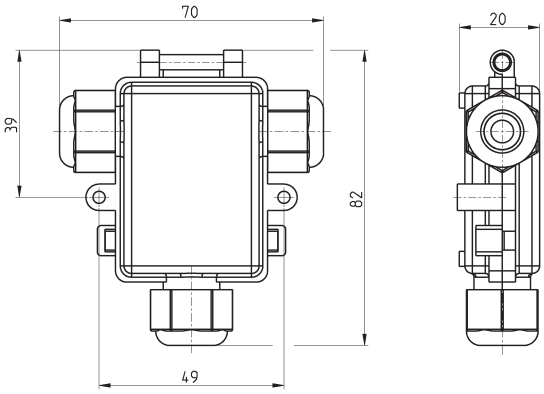

Mod.	Matching valve family	Valve voltage (Output)	Adjusted power	Adjusted frequency
130-222	Series AP - size 22 mm	24 V DC	6.5 W	500 Hz
130-322	Series AP - size 22 mm	12 V DC	6.5 W	500 Hz
130-252	Series AP - size 22 mm	24 V DC	10 W	500 Hz
130-352	Series AP - size 22 mm	12 V DC	10 W	500 Hz
130-213	Series AP - size 16 mm	24 V DC	3 W	1000 Hz
130-313	Series AP - size 16 mm	12 V DC	3 W	1000 Hz
130-433	Series CP - size 16 mm	6 V DC	3.2 W	1000 Hz
130-533	Series CP - size 16 mm	11 V DC	3.2 W	1000 Hz
130-233	Series CP - size 16 mm	24 V DC	3.2 W	1000 Hz
130-442	Series CP - size 20 mm	6 V DC	4.3 W	500 Hz
130-342	Series CP - size 20 mm	12 V DC	4.3 W	500 Hz
130-242	Series CP - size 20 mm	24 V DC	4.3 W	500 Hz
130-463	Series CP pressure compensated - size 20 mm	6 V	4.2 W	1000 Hz
130-363	Series CP pressure compensated - size 20 mm	12 V	4.2 W	1000 Hz
130-263	Series CP pressure compensated - size 20 mm	24 V	4.2 W	1000 Hz

Connector Mod. 125-800 DIN 43650 pin spacing 9,4mm

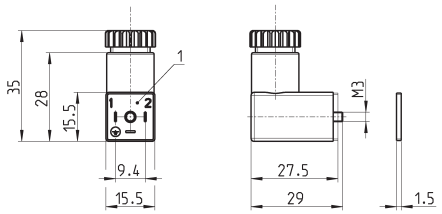

Mod.
125-800

1 = 90° adjustable connector

Connector Mod. 122-800 DIN 43650 (PG)

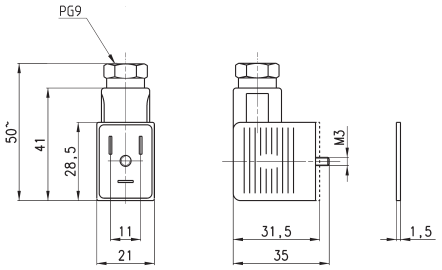

Mod.	Torque (Nm)
122-800	0.5

Series LR digital proportional servo valves

3/3-way directly operated servo valves for the flow (LRWD2), pressure (LRPD2) and position (LRXD2) control

- Digital version which is completely configurable through micro USB
- Rotating spool system with a metal to metal seal
- High flow rate
- Electronic control to ensure high precision in the flow control
- 3-way-function with 4 - 6 mm nominal diameters
- Compact version for cabinet mounting on DIN-rail
- Position control version

Series LR digital proportional servo valves are direct driven 3/3-way valves with a patented rotating spool system with closed loop control circuit. The electronic board is integrated into the valve's body ready to connect.

Series LR*D2 digital proportional servo valve has been designed to be as compact as possible in order to save space and to be mounted on a DIN-rail.
Thanks to this new digital version, the valve can be configurated through a USB connection according to different requirements.

GENERAL DATA

Power supply	24 V DC +/- 10%, max absorption 1.5 A
Command signal	+/- 10 V 0-10 V 4-20 mA
Hysteresis	1% FS LRWD2 - 0,2% FS LRPD2
Linearity	1% FS LRWD2 - 0.3% FS LRPD2
Switching time	see the following pages
Working temperature	from 0 to 50° C
Relative humidity of air	max. 90%
Direction of assembly	any
Maximum flow	see the diagrams on the following pages
Medium	filtered compressed air, unlubricated, according to ISO 8573-1 class 3.4.3, inert gas
Supply pressure	-0.9 to 10 bar
Leakage	< 1% of maximum flow rate
Electrical connection	male connector M12 8 poles
Hardware configuration port	micro USB

CODING EXAMPLE

L	R	W	D	2	-	3	4	-	1	-	A	-	00

L	SERIES: L = proportional servo valves	
R	TECHNOLOGY: R = rotating spool	
W	VERSION: W = flow control P = pressure control X = position control	
D	ELECTRONICS: D = digital	
2	MODEL: 2 = compact DIN-RAIL	
3	FUNCTION: 3 = 3/3-way	
4	NOMINAL DIAMETER: 4 = 4 mm 6 = 6 mm	
1	COMMAND SIGNAL (Setpoint): 1 = +/- 10 V 2 = 0 - 10 V 5 = 4 - 20 mA	
A	INPUT SIGNAL: 2 = 0 - 10 V (LRPD2 and LRXD2 only) 4 = 0 - 5V (LRPD2 and LRXD2 only) 5 = 4 - 20mA (LRPD2 and LRXD2 only)	A = internal encoder (LRWD2 only) B = 1 bar (internal sensor - LRPD2 only) D = 10 bar (internal sensor - LRPD2 only) E = 250 mbar (internal sensor - LRPD2 only) F = +1/-1 bar (internal sensor - LRPD2 only)
00	CABLE: 00 = no cable	2F = straight cable of 2 m 2R = 90° cable of 2 m 5F = straight cable of 5 m 5R = 90° cable of 5 m

FLOW DIAGRAMS FOR VALVES LRWD2-34 AND LRWD2-36

LEGEND:

A = free flow
B = ΔP1
Q = flow (Nl/min)
S = set point (%)
Pa = inlet pressure (bar)

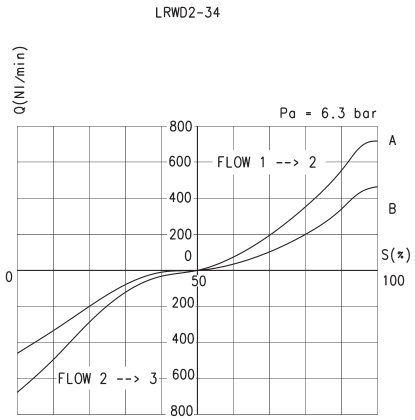

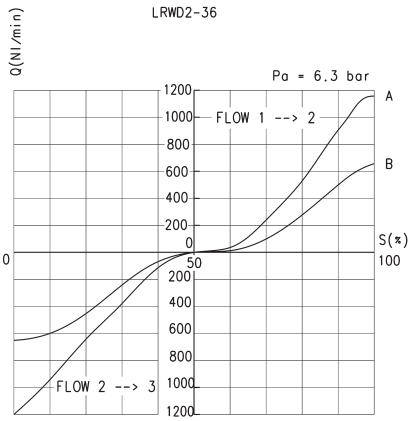

RESPONSE TIMES ACCORDING TO THE COMMAND SIGNAL IN COMPLIANCE WITH THE ISO 10094-2 STANDARD						
COMMAND SIGNAL	-5% ÷ +5%	+5% ÷ -5%	-25% ÷ +25%	+25% ÷ -25%	-90% ÷ +90%	+90% ÷ -90%
Time [ms] LRWD2-34	4	5	6	9	10	10
Time [ms] LRWD2-36	5	5	6	6	10	10

*** closed valve with SET POINT = 0**
loaded valve with SET POINT = +
exhaust valve with SET POINT = -

FLOW DIAGRAMS FOR VALVE LRPD2-34

LEGEND:
P = regulated pressure (bar)
F = flow (Nl/min)
Pa = inlet pressure (bar)

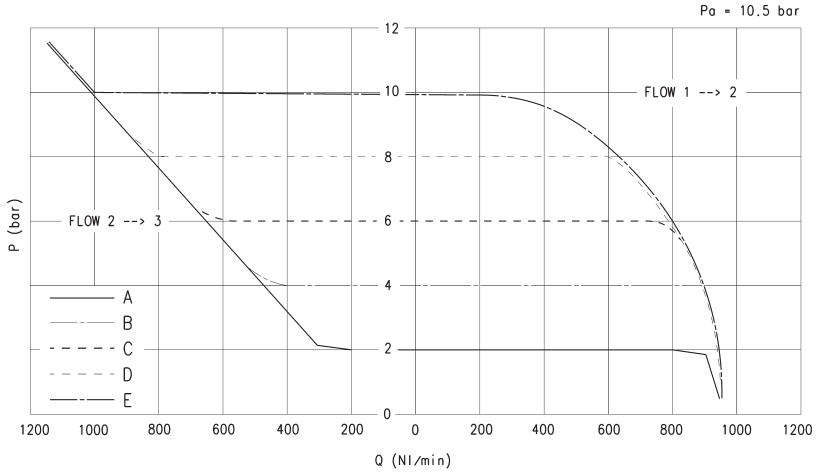

RESPONSE TIMES WITH COMMAND SIGNAL BETWEEN 0% AND 100% IN COMPLIANCE WITH ISO 10094-2 STANDARD			
	Without volume	Volume 0,5 l	Volume 2 l
Filling [ms]	24	313	1841
Exhaust [ms]	35	663	3640

valve with SET POINT = 0% and regulated pressure = 0 bar

valve with SET POINT = 100% and regulated pressure = maximum pressure (example: 10 - 1 bar or 250 mbar)

FLOW DIAGRAMS FOR VALVE LRPD2-36

LEGEND:
P = regulated pressure (bar)
F = flow (Nl/min)
Pa = inlet pressure (bar)

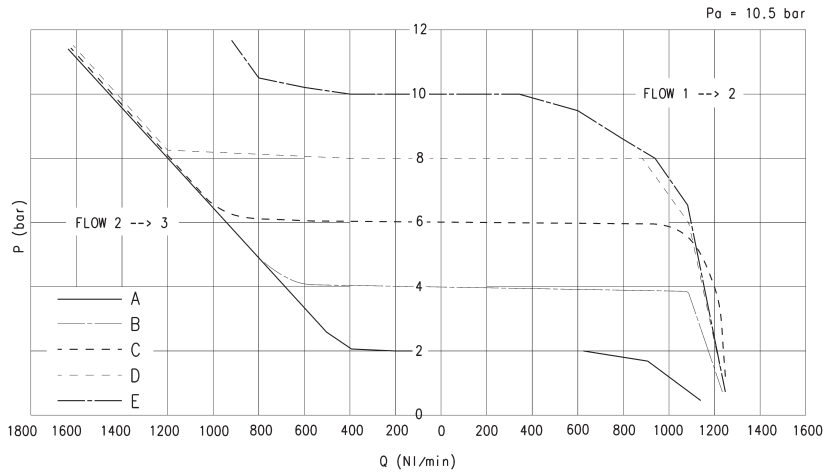

RESPONSE TIMES WITH COMMAND SIGNAL BETWEEN 0% AND 100% IN COMPLIANCE WITH ISO 10094-2 STANDARD			
	Without volume	Volume 0,5 l	Volume 2 l
Filling [ms]	20	263	1560
Exhaust [ms]	32	357	1905

valve with SET POINT = 0% and regulated pressure = 0 bar

valve with SET POINT = 100% and regulated pressure = maximum pressure (example: 10 - 1 bar or 250 mbar)

Series LRXD2 - pneumatic and electrical schemes for the installation

The LRXD2 servo valves are proportional valves with a high-precision integrated control for the positioning of pneumatic cylinders. The valves include a patented 3-way system based on the rotating spool principle with electronic control of the spool position. The servo pneumatic closed loop system allows the control of the position through the feedback of the external positioning sensor or of the Camozzi 6PF cylinder with the integrated linear transducer.
The electronic board which is integrated in the valve body manages speed and acceleration directly.
The Master valve Mod. LRXD2 is equipped with a proper signal to command a LRWD2 valve that will work as a slave-valve.

Configuration for the position control with two valves (Fig. 1)
A = Slave LRWD2-3*-2-A-00 - B = Master LRXD2-3*-*-4-00 - C = 6PF cylinder...

Configuration for the position control with a LRXD2 valve (Fig. 2)
A = Master LRXD2-3*-*-4-00 - B = PR104-... - C = 6PF cylinder...

Fig.1

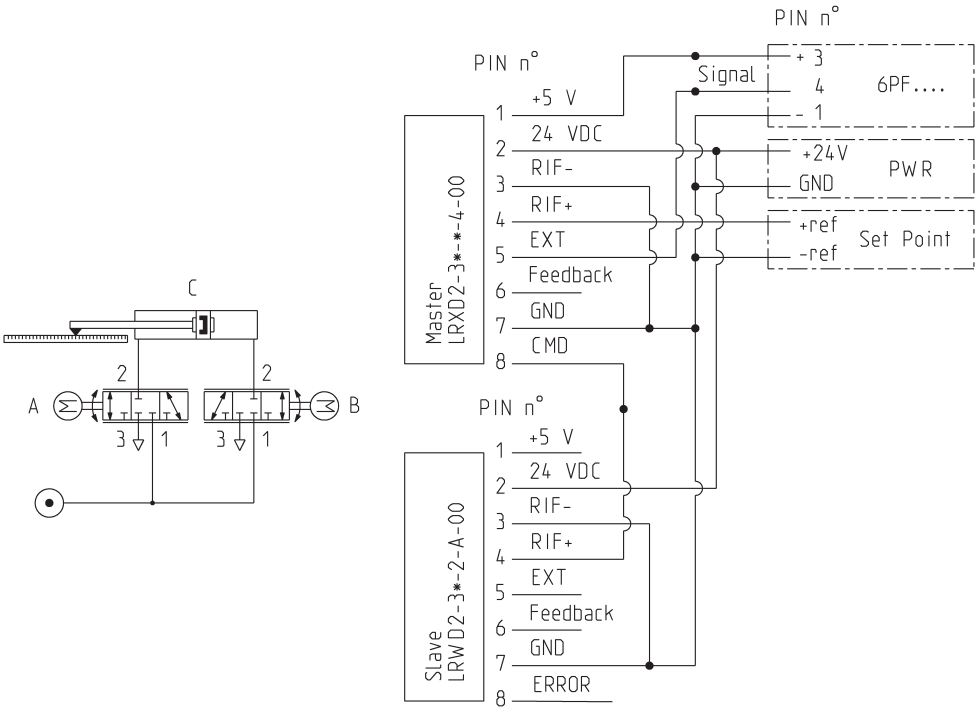

Fig.2

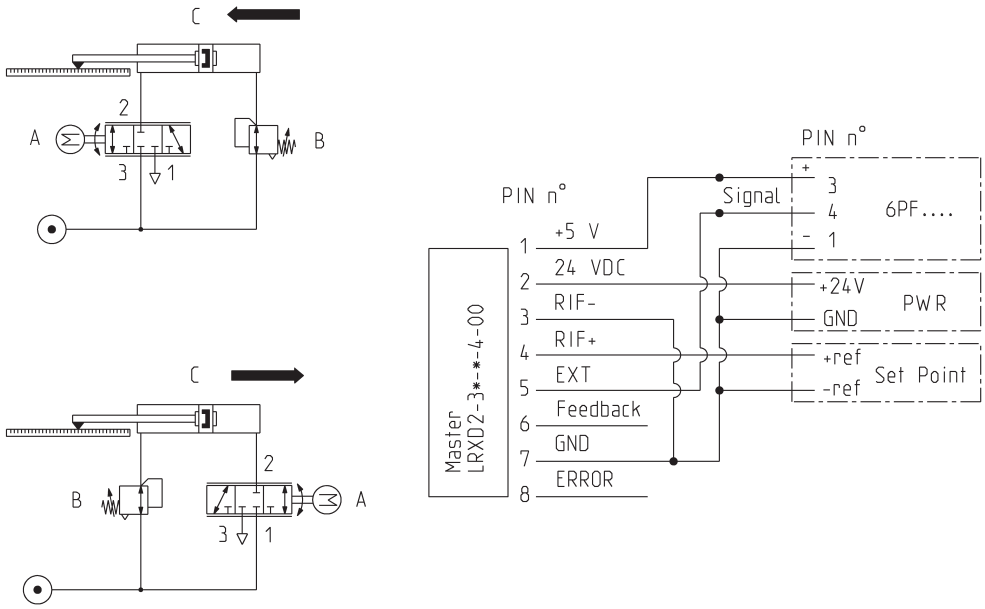

Series LRPD2 - pneumatic scheme for the installation

SV = setpoint value
PV = process value
B = sensor
PID = proportional control, integrative, derivative

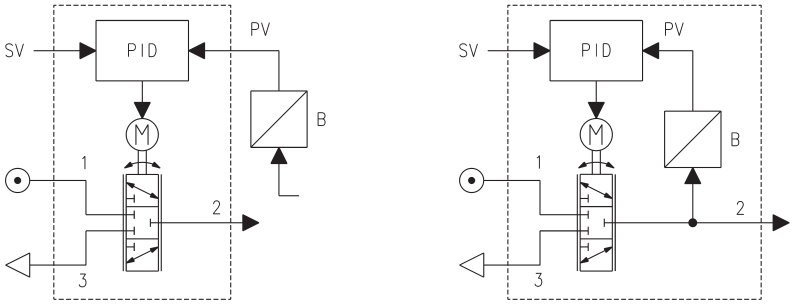

Series LR digital proportional servo valves - dimensions

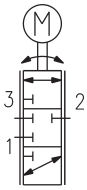

The detailed user and maintenance manual and the Hardware configuration Software of the valve is available online at http://catalogue.camozzi.com.

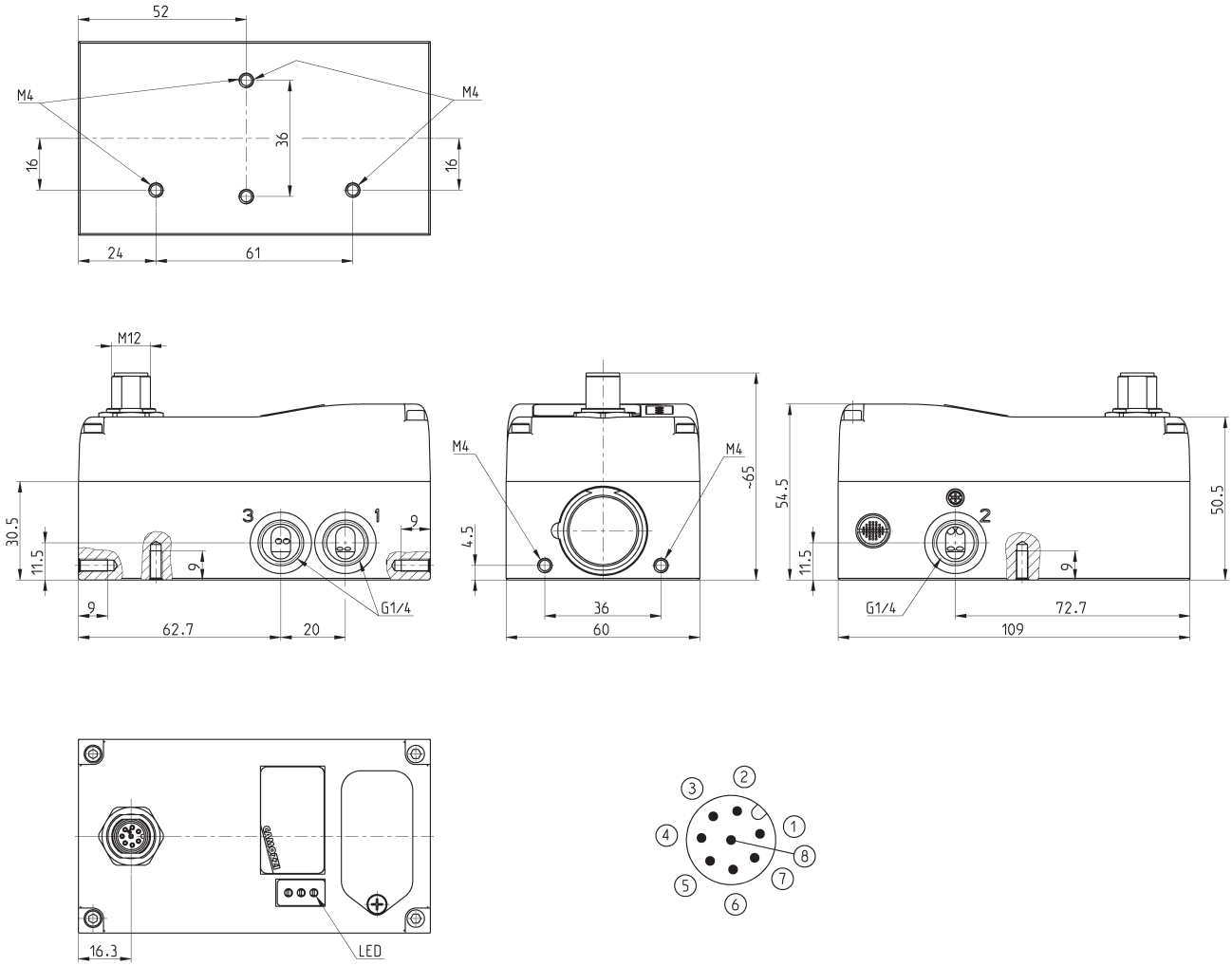

PIN	SIGNAL		DESCRIPTION
1	+5V		+5V power supply for external potentiometer transducer (ref. GND). If used, it is necessary to connect RIF- with GND.
2	24 V DC		24V DC power supply (logic and motor): connect to the positive pole of the 24V DC power supply (ref. GND)
3	RIF-		GND reference or NEGATIVE pole of the command signal (0-10V / 4-20mA / ±10V)
4	RIF+		POSITIVE reference of the command signal (0-10V / 4-20mA / ±10V)
5	EXT	for LRWD valve:	not used
		for LRXD valve:	feedback signal of the external transducer 0-5V / 0-10V / 4-20mA (ref. RIF-)
		for LRPD valve:	feedback signal of the external transducer 0-5V / 0-10V / 4-20mA (ref. RIF-). To be used only with LRPD2 valve versions with external sensor.
6	FBK		feedback signal 0-10V / 4-20mA (ref. GND)
7	GND		common (reference pin 1 and 2): connect to the negative pole of the 24V DC power supply (compulsory)
8	ERR	for LRWD and LRPD valve:	error signal (output) 0-24V (ref. GND)
		for LRXD valve:	command signal 0-10V for slave valve (ref. GND)

Series LR digital proportional servo valves - technical characteristics

* To order the complete code, please replace the asterisk with 4 or 6 according to the desired nominal diameter.

Mod.	Control	Command/Input signal	Sensor/External signal	
LRWD2-3*-1-A-00	flow	+/- 10 V	-	
LRWD2-3*-2-A-00	flow	0-10 V	-	
LRWD2-3*-5-A-00	flow	4..20 mA	-	
LRPD2-3*-1-2-00	pressure	+/- 10 V	0..10 V	
LRPD2-3*-2-2-00	pressure	0-10 V	0..10 V	
LRPD2-3*-5-2-00	pressure	4..20 mA	0..10 V	
LRPD2-3*-1-4-00	pressure	+/- 10 V	0 - 5 V	
LRPD2-3*-2-4-00	pressure	0-10 V	0 - 5 V	
LRPD2-3*-5-4-00	pressure	4..20 mA	0 - 5 V	
LRPD2-3*-1-5-00	pressure	+/- 10 V	4..20 mA	
LRPD2-3*-2-5-00	pressure	0-10 V	4..20 mA	
LRPD2-3*-5-5-00	pressure	4..20 mA	4..20 mA	
LRPD2-3*-1-B-00	pressure	+/- 10 V	1 bar internal	
LRPD2-3*-2-B-00	pressure	0-10 V	1 bar internal	
LRPD2-3*-5-B-00	pressure	4..20 mA	1 bar internal	
LRPD2-3*-1-D-00	pressure	+/- 10 V	10 bar internal	
LRPD2-3*-2-D-00	pressure	0-10 V	10 bar internal	
LRPD2-3*-5-D-00	pressure	4..20 mA	10 bar internal	
LRPD2-3*-1-E-00	pressure	+/- 10 V	250 mbar internal	
LRPD2-3*-2-E-00	pressure	0-10 V	250 mbar internal	
LRPD2-3*-5-E-00	pressure	4..20 mA	250 mbar internal	
LRPD2-3*-1-F-00	pressure	+/- 10 V	+1/-1 bar internal	
LRPD2-3*-2-F-00	pressure	0-10 V	+1/-1 bar internal	
LRPD2-3*-5-F-00	pressure	4..20 mA	+1/-1 bar internal	
LRXD2-3*-1-4-00	position	+/- 10 V	0-5 V	suitable to work with the 6PF cylinder (see the PNEUMATIC ACTUATION catalogue)
LRXD2-3*-2-4-00	position	0-10 V	0-5 V	suitable to work with the 6PF cylinder (see the PNEUMATIC ACTUATION catalogue)
LRXD2-3*-5-4-00	position	4..20 mA	0-5 V	suitable to work with the 6PF cylinder (see the PNEUMATIC ACTUATION catalogue)
LRXD2-3*-1-2-00	position	+/- 10 V	0-10 V	
LRXD2-3*-2-2-00	position	0-10 V	0-10 V	
LRXD2-3*-5-2-00	position	4..20 mA	0-10 V	
LRXD2-3*-1-5-00	position	+/- 10 V	4..20mA	
LRXD2-3*-2-5-00	position	0-10 V	4..20mA	
LRXD2-3*-5-5-00	position	4..20mA	4..20mA	

Fixing foot Mod. LRADB

Supplied with:
2x feet
4x screws

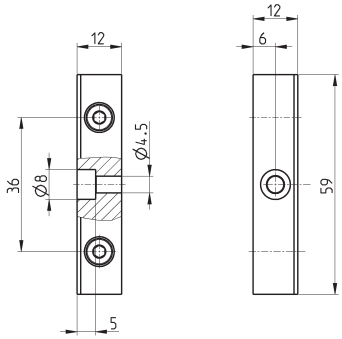

Mod.
LRADB

Mounting brackets for DIN-rail Mod. PCF-EN531

DIN EN 50022 (7,5mm x 35mm - width 1)

Supplied with:
2x mounting brackets
2x screws M4x6 UNI 5931
2x nuts

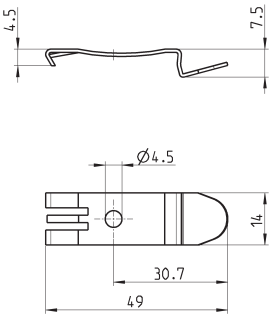

Mod.
PCF-EN531

Electrical tee box Mod. CS-AA08EC

Connection valve-PLC-external transducer

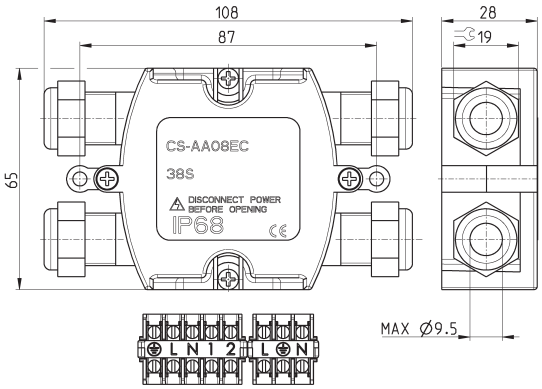

CS-AA08EC

Straight female connector M12 8 poles

For electric supply and commands

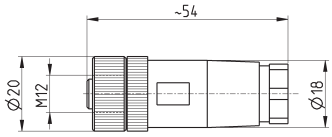

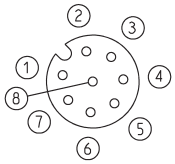

CS-LF08HC

Cable with straight female connector M12 8 poles

For electrical supply and commands

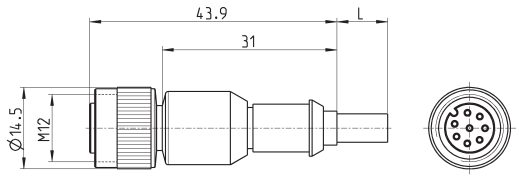

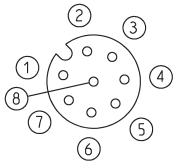

Mod.	Cable length (m)
CS-LF08HB-C200	2
CS-LF08HB-C500	5

Cable with angular (90°) female connector M12 8 poles

For electric supply and commands

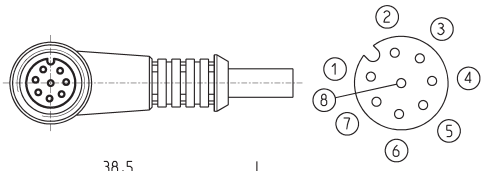

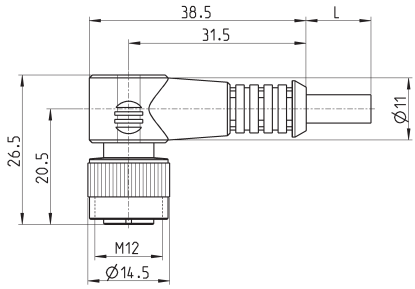

Mod.	Cable length (m)
CS-LR08HB-C200	2
CS-LR08HB-C500	5

USB to Micro USB cable Mod. G11W-G12W-2

For the hardware configuration
of the Camozzi products

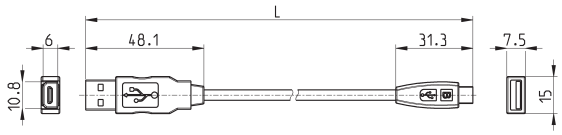

Mod.	description	connections	material for outer sheath	cable length "L" (m)
G11W-G12W-2	black shielded cable 28 AWG	standard USB to Micro USB	PVC	2

Series K8P electronic proportional micro regulator

News: use with oxygen

Proportional regulator for the pressure control

- High precision
- Reduced response times
- Minimum consumption
- Self-regulation function
- Flexibility of use
- Compact design
- Suitable for use with oxygen

Series K8P electronic proportional micro regulators have evolved from our Series K8 mini-solenoid valves. Series K8P regulators guarantee excellent pressure regulation, fast response times, self-regulation and low energy consumption.
Series K8P is a high performance proportional pressure regulator which is suitable for use in all applications where high precision, quick response times and low consumption are required.

The K8P regulator adjusts the outlet pressure through the operation of two K8 monostable valves according to the inlet signal and to the retroactivity of the internal pressure sensor. A self-adjusting function has been integrated into the regulator control algorithm to guarantee the highest levels of performance apart from the volume connected.

GENERAL DATA

Fluids	filtered compressed air, unlubricated, according to ISO 8573-1 class 7.4.4, oxygen, inert gases (argon, molecular nitrogen)	
Pressures	Regulated pressure 0.5 ÷ 10 bar 0.15 ÷ 3 bar 0.35 ÷ 7 bar 0.05 ÷ 1 bar	Max inlet pressure 11 bar 4 bar 8 bar 1.5 bar
Working temperature	0 ÷ 50°C	
Analogical input	0-10 V DC 4-20 mA Ripple ≤ 0,2%	
Analogical output	0.5 - 9.5 V [Feedback]	
Analog input impedance	20.000 Ω for versions 0-10 V 250 Ω for versions 4-20 mA	
Maximum flow	12 l/min with regulated pressure = 6 bar (IN Pres. 10 bar) 6 l/min with regulated pressure = 3 bar (IN Pres. 4 bar) 8 l/min with regulated pressure = 7 bar (IN Pres. 8 bar) 2 l/min with regulated pressure = 1 bar (IN Pres. 1.5 bar)	
Supply / Use	24 V - ~ 1 W	
Function	3/2 NC	
Linearity	≤ ±1% FS	
Hysteresis	±0.5% FS	
Resolution	±0.5% FS (referred to the command signal)	
Repeatability	±0.5% FS	
Minimal set point change	50 mV => 50 mB (10 bar) 100 mV => 30 mB (3 bar)	
Electrical connection	M8 4 Pin (Male)	
Protection class	IP65 (with standard sub-base or with single use) IP51 (with Light sub-base and Light Sub-base for the pressure remote reading)	
In compliance with the European Directive 2004/108/EC		

CODING EXAMPLE

K8P	-	0	-	D	5	2	2	-	0

K8P	SERIES
0	BODY DESIGN: 0 = Stand alone S = Standard Sub-base L = Light Sub-base T = Light Sub-base for the pressure remote reading
D	WORKING PRESSURE: D = 0 - 10 bar E = 0 - 3 bar F = 0 - 7 bar B = 0 - 1 bar
5	VALVE FUNCTIONS: 5 = 3/2-way NC
2	COMMAND: 2 = 0-10 V DC 3 = 4-20 mA
2	OUTPUT SIGNAL: 2 = 0-10 V
0	CABLE LENGTH: 0 = without cable 2F = straight cable, 2 m 2R = right angle cable (90 degrees), 2 m 5F = straight cable, 5 m 5R = right angle cable (90 degrees), 5 m
OX1	VERSIONS: = standard OX1 = for use with oxygen (in compliance with ASTM G93-03 Level E)
	APPLICATIONS The K8P proportional regulator can be used as a pilot valve to control the opening of high flow valves or to check the high flow pressure regulators proportionally (version with sub-base for the pressure remote reading). It enables proportional control of power in lifting systems and can be used with inert gas to maintain a constant pressure in pneumatic cylinders or expansion valve chambers. It has also been designed to maintain a constant pressure during the pulling power applied to the wires in winding machines, to modulate pressure during the smoothing process in woodworking machines or to adjust the opening of diaphragm valves.

Interface for single use without sub-base

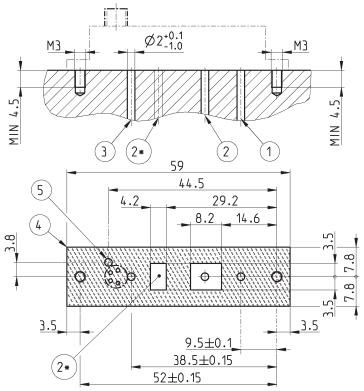

DRAWING LEGEND	
	Notes
1 = Inlet pressure	Pneumatic connection
2 = Outlet pressure	Pneumatic connection
2* = area for possible positioning of outlet port 2	Do not exceed the indicated outline
3 = Exhaust	Pneumatic connection
4 = OUTLET DIMENSION	
5 = VENT PORT FOR IP65	Optional when a OR seal is mounted

FLOW DIAGRAMS

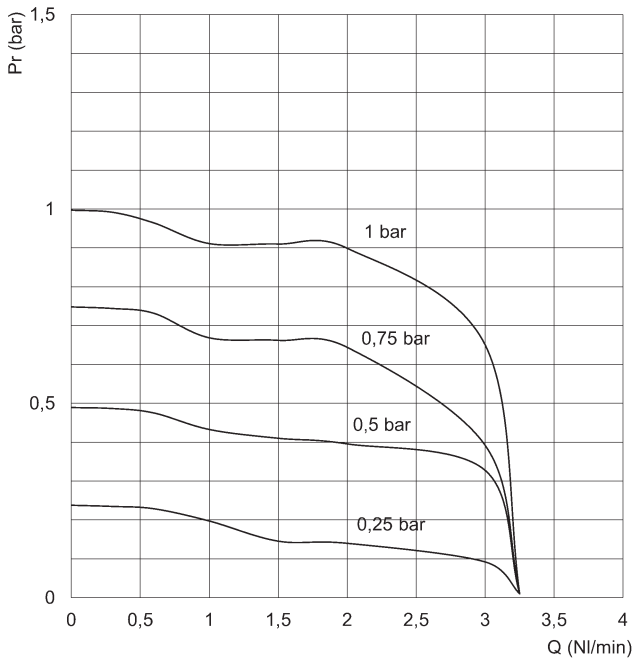

0-1 bar version

Pr = Outlet pressure (bar)*
Q = Flow (Nl/min)*

* = Inlet pressure 2 bar

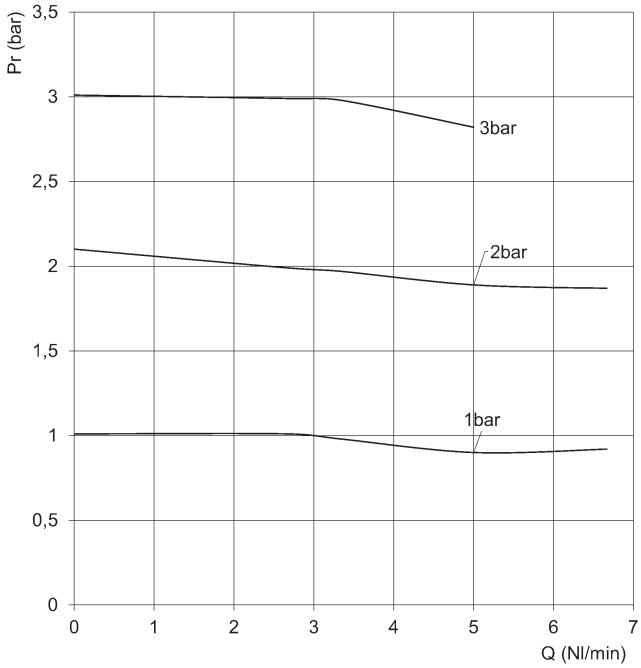

0-3 bar version

Pr = Outlet pressure (bar)*
Q = Flow (Nl/min)*

* = Inlet pressure 4 bar

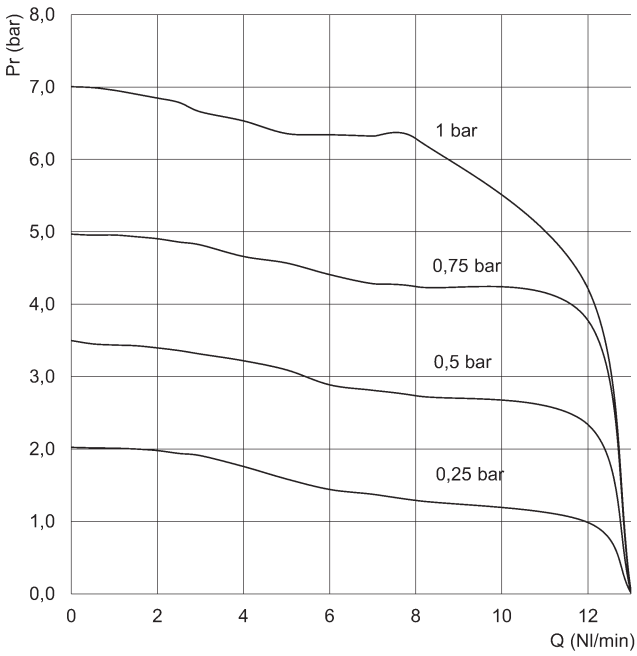

0-7 bar version

Pr = Outlet pressure (bar)*
Q = Flow (Nl/min)*

* = Inlet pressure 8 bar

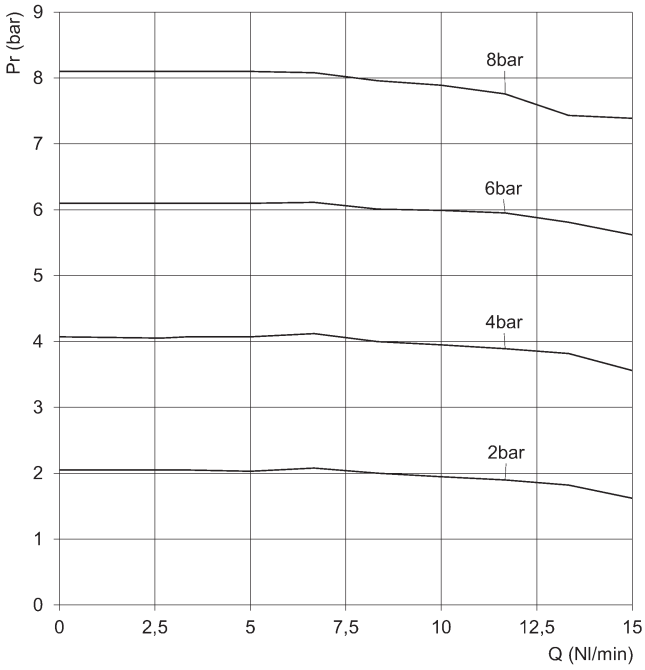

0-10 bar version

Pr = Outlet pressure (bar)*
Q = Flow (Nl/min)*

* = Inlet pressure 10 bar

Series K8P electronic proportional micro regulator

* = sub-bases and single use can be supplied for all versions.
** = all the cables can be supplied for all versions.

M8 4-pole male connector

Pin 1: +24 V DC (Power supply)
Pin 2: Command analogical signal 0-10 V DC or 4-20 mA
Pin 3: 0 V (Ground) common also for the command signal
Pin 4: Output analogical signal (according to the regulated pressure)

5 red LED
6 green LED

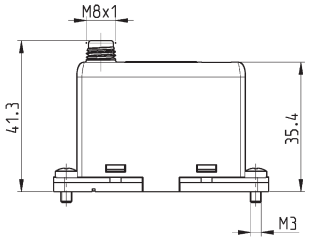

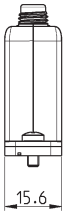

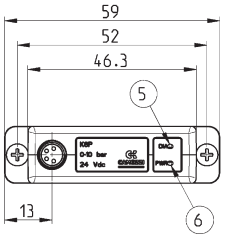

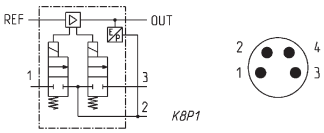

Mod.	Working pressure	Use with oyxgen	Command
K8P-*-D522-**	0-10 bar	no	0-10 V DC
K8P-*-E522-**	0-3 bar	no	0-10 V DC
K8P-*-D532-**	0-10 bar	no	4-20 mA
K8P-*-E532-**	0-3 bar	no	4-20 mA
K8P-*-B522-**	0-1 bar	no	0-10 V DC
K8P-*-F522-**	0-7 bar	no	0-10 V DC
K8P-*-B532-**	0-1 bar	no	4-20 mA
K8P-*-F532-**	0-7 bar	no	4-20 mA
K8P-*-B522-OX1**	0-1 bar	yes	0-10 V DC
K8P-*-F522-OX1**	0-7 bar	yes	0-10 V DC
K8P-*-E522-OX1**	0-3 bar	yes	0-10 V DC
K8P-*-B532-OX1**	0-1 bar	yes	4-20 mA
K8P-*-F532-OX1**	0-7 bar	yes	4-20 mA
K8P-*-E532-OX1**	0-3 bar	yes	4-20 mA

Standard Sub-base

The use of a silencer (Mod. 2939 4) on the exhaust is recommended.

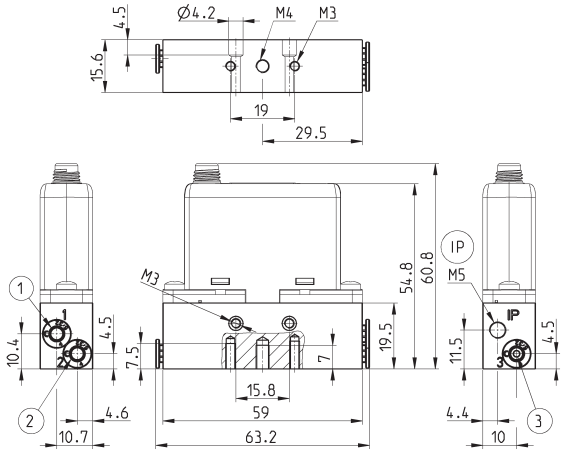

Mod.
K8P-AS

1 = Inlet pressure
2 = Outlet pressure
3 = Exhaust

IP = IP65 connection

Light Sub-base

The use of a silencer (Mod. 2931 M5, 2938 M5, 2901 M5) on the exhaust is recommended.

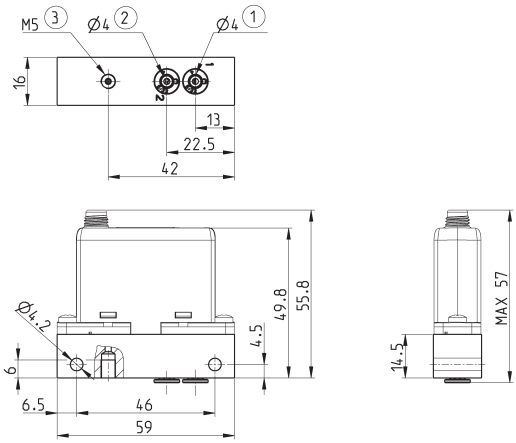

Mod.
K8P-AL

1 = Inlet pressure
2 = Outlet pressure
3 = Exhaust

Light Sub-base for the pressure remote reading

The use of a silencer (Mod. 2931 M5, 2938 M5, 2901 M5) on the exhaust is recommended.

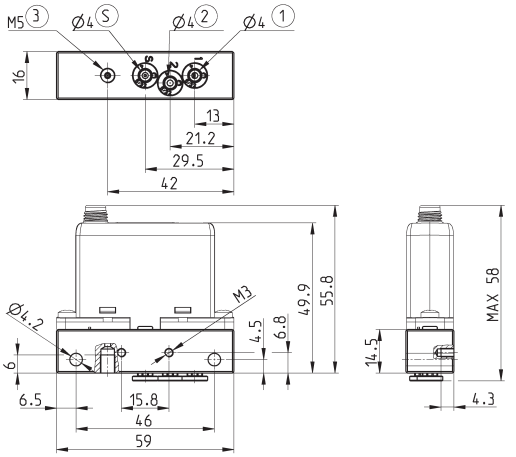

Mod.
K8P-AT

1 = Inlet pressure
2 = Outlet pressure
3 = Exhaust

S = remote-mounted sensor

Mounting bracket for DIN rail

DIN EN 50022 (7,5mm x 35mm - width 1)

Supplied with:
1x mounting bracket
1x screw M4x6 UNI 5931

This accessory cannot be used with the Light sub-base.

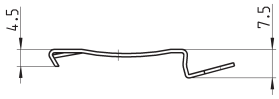

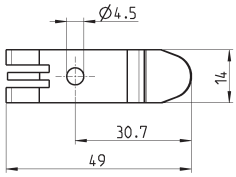

Mod.
PCF-K8P

Bracket for horizontal mounting, for standard sub-base

Supplied with:
1x mounting bracket
2x screws M3x8 UNI 5931

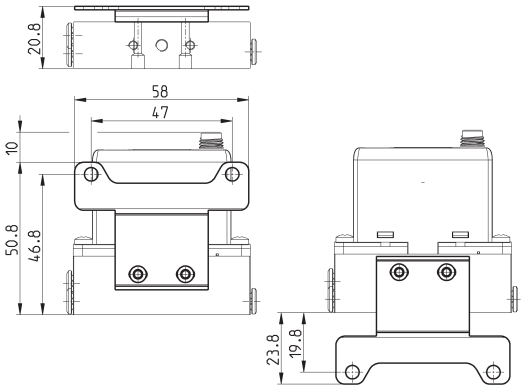

Mod.
K8P-B1

Circular M8 4-pole connectors, Female

With PU sheathing, non shielded cable.
Protection class: IP65

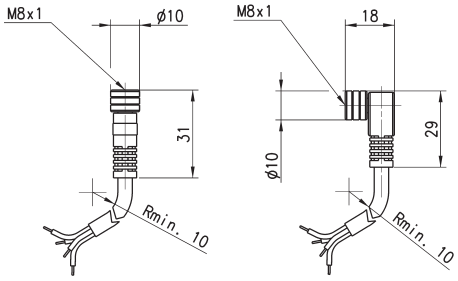

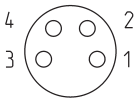

Mod.	Type of connector	Cable length (m)
CS-DF04EG-E200	straight	2
CS-DF04EG-E500	straight	5
CS-DR04EG-E200	right angle (90 degrees)	2
CS-DR04EG-E500	right angle (90 degrees)	5

Series MX-PRO proportional pressure regulator and proportional flow valve

New versions

Regulator and valve ports (standard and Manifold): G1/2
Regulator: with built-in pressure gauge or G1/8 threaded ports
Valve: without pressure gauge

Series MX-PRO electronic proportional pressure regulator is the result of combining advanced technology of Series K8P electronic proportional micro regulator, with reliability and high performance of Series MX2 modular regulators.
This new regulator ensures high precision in pressure regulation, high flow rate and low consumption. Moreover, it can take the most of Series MX ease of assembly to provide particularly compact Manifolds.

- High precision
- Low electric consumption
- High exhaust flow
- Modular with Series MX
- MANIFOLD and external servo pilot supply versions available
- Suitable for use with oxygen

GENERAL DATA

	PROPORTIONAL PRESSURE REGULATOR	PROPORTIONAL FLOW VALVE
Construction	modular, compact, diaphragm type	modular, piston type
Materials	see material tables on the following pages	see material tables on the following pages
Ports	G1/2	G1/2
Mounting	vertical in-line, wall-mounting (by means of clamps)	vertical in-line, wall-mounting (by means of clamps)
Working pressure	0°C ÷ 50°C	0°C ÷ 50°C
Max inlet pressure	11 bar (10 bar), 4 bar (3 bar), 1.5 bar (1 bar), 8 bar (7 bar)	6 bar
Regulated pressure	0.5 ÷ 10 bar, 0.15 ÷ 3 bar, 0.05 ÷ 1 bar, 0.35 ÷ 7	-
Max servo-pilot pressure	4 bar (3 bar), 11 bar (10 bar), 1.5 bar (1 bar), 8 bar (7 bar)	4 bar (essential for the proper functioning)
Overpressure exhaust	with Relieving (standard) or without Relieving	NO
Nominal flow	see flow diagrams on the following pages	see flow diagrams on the following pages
Air specifications	filtered compressed air, non lubricated, class 7.4.4 according to ISO 8573.1 standard. If lubrication is necessary, please use only oils with maximum viscosity of 32 Cst and the version with external servo-pilot supply. The servo-pilot supply air quality class must be 7.4.4 according to ISO 8573.1 standard.	filtered compressed air, non lubricated, class 7.4.4 according to ISO 8573.1 standard. If lubrication is necessary, please use only oils with maximum viscosity of 32 Cst and the version with external servo-pilot supply. The servo-pilot supply air quality class must be 7.4.4 according to ISO 8573.1 standard.
Pressure gauge	with built-in pressure gauge (standard) with G1/8 port	without pressure gauge
Analogical input	0-10 V DC Ripple ≤ 0.2%; 4 – 20 mA	0-10 V DC Ripple ≤ 0.2%; 4 – 20 mA
Analogical output	0.5 - 9.5 V DC [Feedback]	not relevant
Electrical supply	24 V DC ±10%	24 V DC ±10%
Electrical connection	M8 4 Pin (Male)	M8 4 Pin (Male)
Linearity	≤ ± 1% FS	±4% FS
Hysteresis	±0.5% FS	±8% FS
Repeatability	±0.5% FS	±0.35% FS
Sensibility	0.3% FS	5% FS
Protection class	IP51	IP51

CODING EXAMPLE

MX	2	-	1/2	-	R	CV	2	0	4	-	LH

MX	SERIES	
2	SIZE: 2 = G1/2	
1/2	PORTS: 1/2 = G1/2	
R	FUNCTIONING: R = pressure regulator M = Manifold pressure regulator	 V = flow valve W = Manifold flow valve
CV	COMMAND: CV = electrical command 0-10 V DC (regulator only) CA = electrical command 4-20 mA (regulator only)	 EV = electrical command 0-10 V DC with external servo pilot supply EA = electrical command 4-20 mA with external servo pilot supply
2	REGULATOR SETTING RANGE: 1 = working pressure 0 ÷ 3 bar 2 = working pressure 0 ÷ 10 bar 3 = working pressure 0 ÷ 1 bar 4 = working pressure 0 ÷ 7 bar	VALVE SETTING RANGE: 8 = low flow 9 = high flow
0	DESIGN TYPE: 0 = relieving (regulator only) 1 = without relieving	
4	PRESSURE GAUGE: 0 = without pressure gauge, with threaded port for gauges 2 = with built-in pressure gauge 0-6 bar (regulator only) 4 = with built-in pressure gauge 0-12 bar (regulator only)	
LH	FLOW DIRECTION: = from left to right (standard) LH = from right to left	
OX1	VERSIONS: = standard OX1 = for use with oxygen (in compliance with ASTM G93-03 Level E), FKM seals	

Further details about the assembly of a single component with fixing flanges or wall-mounting can be found in the AIR TREATMENT catalogue, section SERIES MX ASSEMBLED FRL.

Series MX-PRO proportional pressure regulator - materials

R = proportional pressure regulator
M = Manifold proportional pressure regulator

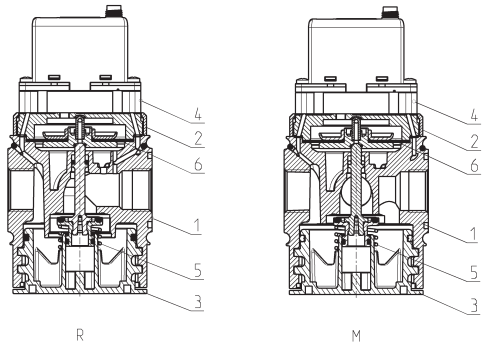

PARTS	MATERIALS, standard version	MATERIALS, oxygen version
1 = Body	Aluminium	Aluminium
2 = Covering	Polyacetal	PBT
3 = Valve holder plug	Polyacetal	PBT
4 = Upper base	Aluminium	Aluminium
5 = Lower spring	Stainless steel	Stainless steel
6 = Diaphragm	NBR	FKM
Seals	NBR	FKM

Series MX-PRO proportional flow valve - materials

V = proportional flow valve
W = Manifold proportional flow valve

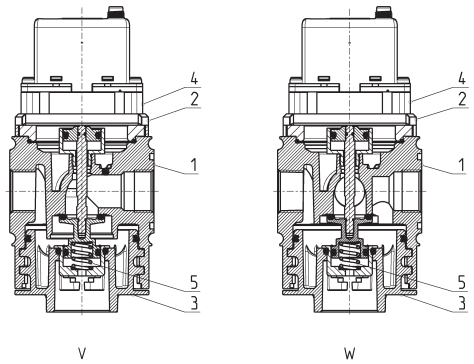

PARTS	MATERIALS, standard version	MATERIALS, oxygen version
1 = Body	Aluminium	Aluminium
2 = Covering	Polyacetal	PBT
3 = Valve holder plug	Polyacetal	PBT
4 = Upper base	Aluminium	Aluminium
5 = Lower spring	Stainless steel	Stainless steel
Seals	NBR	FKM

Series MX-PRO proportional pressure regulator

Male connector M8 4 poles
Pin 1: +24 V DC (Power supply)
Pin 2: Command analogical signal 0-10 V DC or 4-20 mA
Pin 3: 0 V (Ground) common also for the command signal
Pin 4: Output analogical signal (according to the regulated pressure)

5 red LED
6 green LED

DRAWING NOTE:
** = in the versions with external servo pilot supply only (MX2-1/2-REV... and MX2-1/2-REA...)

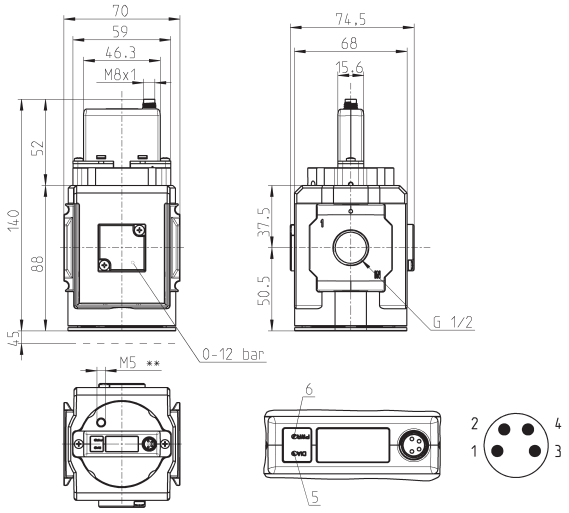

Mod.	Electrical command	Setting range	Pressure gauge
MX2-1/2-R*V10**	0-10 V DC	0 ÷ 3 bar	without pressure gauge
MX2-1/2-R*V12**	0-10 V DC	0 ÷ 3 bar	with built-in pressure gauge 0-6
MX2-1/2-R*V14**	0-10 V DC	0 ÷ 3 bar	with built-in pressure gauge 0-12
MX2-1/2-R*V20**	0-10 V DC	0 ÷ 10 bar	without pressure gauge
MX2-1/2-R*V22**	0-10 V DC	0 ÷ 10 bar	with built-in pressure gauge 0-6
MX2-1/2-R*V24**	0-10 V DC	0 ÷ 10 bar	with built-in pressure gauge 0-12
MX2-1/2-R*V30**	0-10 V DC	0 ÷ 1 bar	without pressure gauge
MX2-1/2-R*V32**	0-10 V DC	0 ÷ 1 bar	with built-in pressure gauge 0-6
MX2-1/2-R*V34**	0-10 V DC	0 ÷ 1 bar	with built-in pressure gauge 0-12
MX2-1/2-R*V40**	0-10 V DC	0 ÷ 7 bar	without pressure gauge
MX2-1/2-R*V42**	0-10 V DC	0 ÷ 7 bar	with built-in pressure gauge 0-6
MX2-1/2-R*V44**	0-10 V DC	0 ÷ 7 bar	with built-in pressure gauge 0-12
MX2-1/2-R*A10**	4-20 mA	0 ÷ 3 bar	without pressure gauge
MX2-1/2-R*A12**	4-20 mA	0 ÷ 3 bar	with built-in pressure gauge 0-6
MX2-1/2-R*A14**	4-20 mA	0 ÷ 3 bar	with built-in pressure gauge 0-12
MX2-1/2-R*A20**	4-20 mA	0 ÷ 10 bar	without pressure gauge
MX2-1/2-R*A22**	4-20 mA	0 ÷ 10 bar	with built-in pressure gauge 0-6
MX2-1/2-R*A24**	4-20 mA	0 ÷ 10 bar	with built-in pressure gauge 0-12
MX2-1/2-R*A30**	4-20 mA	0 ÷ 1 bar	without pressure gauge
MX2-1/2-R*A32**	4-20 mA	0 ÷ 1 bar	with built-in pressure gauge 0-6
MX2-1/2-R*A34**	4-20 mA	0 ÷ 1 bar	with built-in pressure gauge 0-12
MX2-1/2-R*A40**	4-20 mA	0 ÷ 7 bar	without pressure gauge
MX2-1/2-R*A42**	4-20 mA	0 ÷ 7 bar	with built-in pressure gauge 0-6
MX2-1/2-R*A44**	4-20 mA	0 ÷ 7 bar	with built-in pressure gauge 0-12
MX2-1/2-R*V10-OX1**	0-10 V DC	0 ÷ 3 bar	without pressure gauge
MX2-1/2-R*V12-OX1**	0-10 V DC	0 ÷ 3 bar	with built-in pressure gauge 0-6
MX2-1/2-R*V14-OX1**	0-10 V DC	0 ÷ 3 bar	with built-in pressure gauge 0-12
MX2-1/2-R*V30-OX1**	0-10 V DC	0 ÷ 1 bar	without pressure gauge
MX2-1/2-R*V32-OX1**	0-10 V DC	0 ÷ 1 bar	with built-in pressure gauge 0-6
MX2-1/2-R*V34-OX1**	0-10 V DC	0 ÷ 1 bar	with built-in pressure gauge 0-12
MX2-1/2-R*V40-OX1**	0-10 V DC	0 ÷ 7 bar	without pressure gauge
MX2-1/2-R*V42-OX1**	0-10 V DC	0 ÷ 7 bar	with built-in pressure gauge 0-6
MX2-1/2-R*V44-OX1**	0-10 V DC	0 ÷ 7 bar	with built-in pressure gauge 0-12
MX2-1/2-R*A10-OX1**	4-20 mA	0 ÷ 3 bar	without pressure gauge
MX2-1/2-R*A12-OX1**	4-20 mA	0 ÷ 3 bar	with built-in pressure gauge 0-6
MX2-1/2-R*A14-OX1**	4-20 mA	0 ÷ 3 bar	with built-in pressure gauge 0-12
MX2-1/2-R*A30-OX1**	4-20 mA	0 ÷ 1 bar	without pressure gauge
MX2-1/2-R*A32-OX1**	4-20 mA	0 ÷ 1 bar	with built-in pressure gauge 0-6
MX2-1/2-R*A34-OX1**	4-20 mA	0 ÷ 1 bar	with built-in pressure gauge 0-12
MX2-1/2-R*A40-OX1**	4-20 mA	0 ÷ 7 bar	without pressure gauge
MX2-1/2-R*A42-OX1**	4-20 mA	0 ÷ 7 bar	with built-in pressure gauge 0-6
MX2-1/2-R*A44-OX1**	4-20 mA	0 ÷ 7 bar	with built-in pressure gauge 0-12

TABLE NOTES:

* = versions with or without external pilot supply

** = versions with our without relieving

LH = add LH at the end of the code for air inlet from the right to the left

PRESSURE REGULATOR FLOW DIAGRAMS - STANDARD VERSION

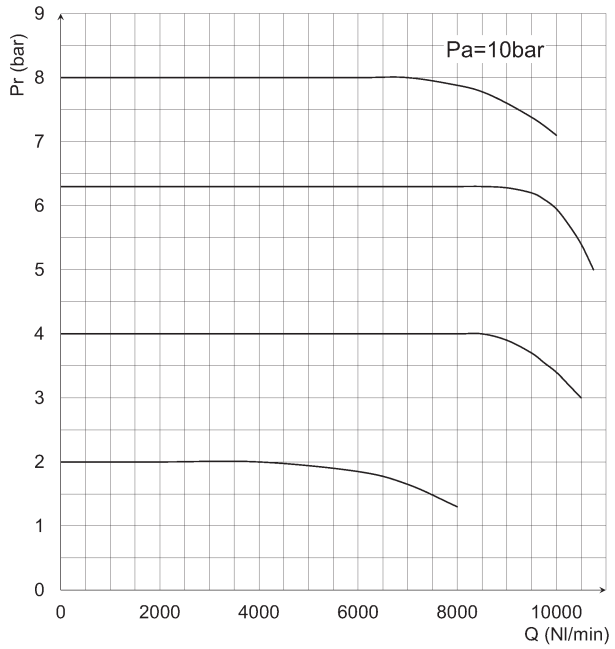

Pr = Regulated pressure
Q = Flow

Pa = Inlet pressure

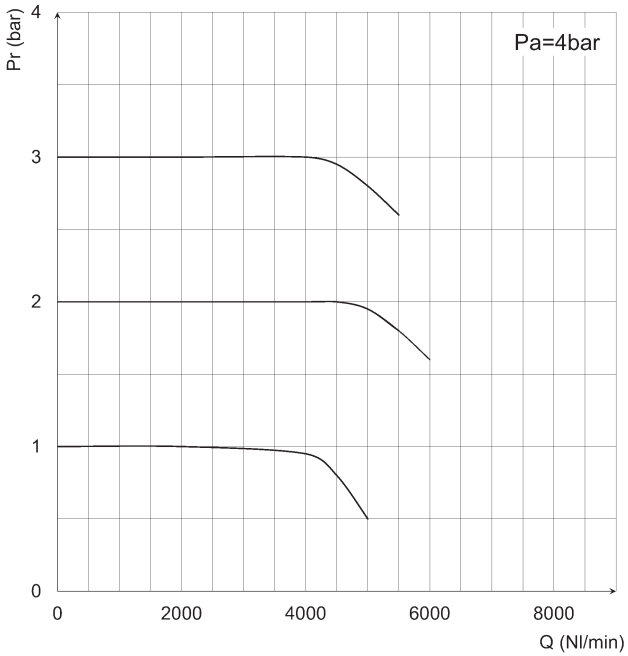

Pr = Regulated pressure
Q = Flow

Pa = Inlet pressure

EXHAUST FLOW DIAGRAM AND PNEUMATIC SYMBOLS

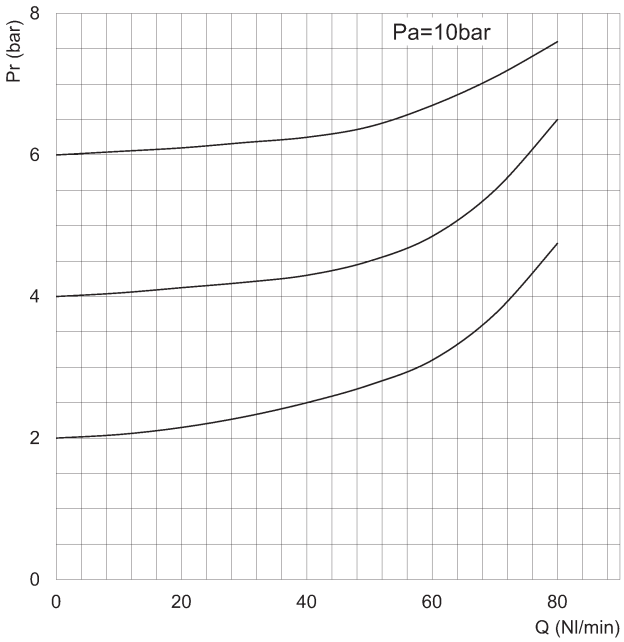

Pr = Regulated pressure
Q = Flow

Pa = Inlet pressure

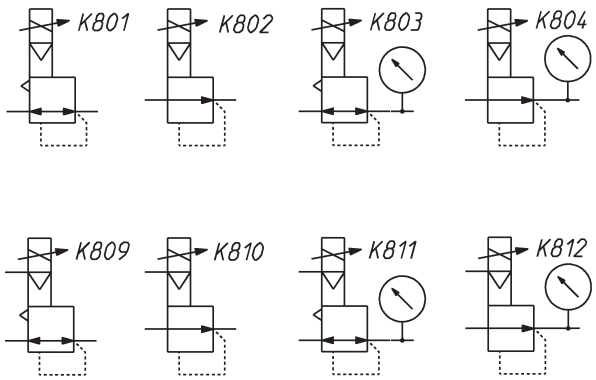

K801 = relieving, electrical command
K802 = NO relieving, electrical command
K803 = relieving, electrical command, built-in pressure gauge
K804 = NO relieving, electrical command, built-in pressure gauge
K809 = relieving, electrical command, ext. servo pilot supply
K810 = NO reliev., electrical command, ext. servo pilot supply
K811 = reliev., el. com., built-in pr. gauge, ext. servo pilot supply
K812 = NO reliev., el. com., built-in pr. gauge, ext. servo pilot sup.

Series MX-PRO proportional pressure regulator

Male connector M8 4 poles
Pin 1: +24 V DC (Power supply)
Pin 2: Command analogical signal 0-10 V DC or 4-20 mA
Pin 3: 0 V (Ground) common also for the command signal
Pin 4: Output analogical signal (according to the regulated pressure)

5 red LED
6 green LED

DRAWING NOTE:
** = in the versions with external servo pilot supply only (MX2-1/2-REV... and MX2-1/2-REA...)

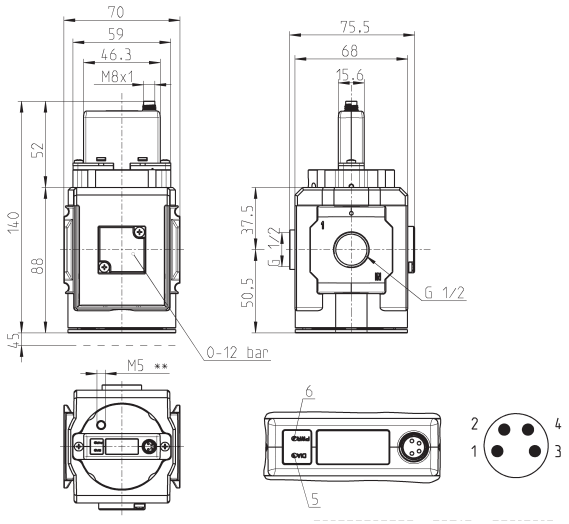

Mod.	Electrical command	Setting range	Pressure gauge
MX2-1/2-M*V10**	0-10 V DC	0 ÷ 3 bar	without pressure gauge
MX2-1/2-M*V12**	0-10 V DC	0 ÷ 3 bar	with built-in pressure gauge 0-6
MX2-1/2-M*V14**	0-10 V DC	0 ÷ 3 bar	with built-in pressure gauge 0-12
MX2-1/2-M*V20**	0-10 V DC	0 ÷ 10 bar	without pressure gauge
MX2-1/2-M*V22**	0-10 V DC	0 ÷ 10 bar	with built-in pressure gauge 0-6
MX2-1/2-M*V24**	0-10 V DC	0 ÷ 10 bar	with built-in pressure gauge 0-12
MX2-1/2-M*V30**	0-10 V DC	0 ÷ 1 bar	without pressure gauge
MX2-1/2-M*V32**	0-10 V DC	0 ÷ 1 bar	with built-in pressure gauge 0-6
MX2-1/2-M*V34**	0-10 V DC	0 ÷ 1 bar	with built-in pressure gauge 0-12
MX2-1/2-M*V40**	0-10 V DC	0 ÷ 7 bar	without pressure gauge
MX2-1/2-M*V42**	0-10 V DC	0 ÷ 7 bar	with built-in pressure gauge 0-6
MX2-1/2-M*V44**	0-10 V DC	0 ÷ 7 bar	with built-in pressure gauge 0-12
MX2-1/2-M*A10**	4-20 mA	0 ÷ 3 bar	without pressure gauge
MX2-1/2-M*A12**	4-20 mA	0 ÷ 3 bar	with built-in pressure gauge 0-6
MX2-1/2-M*A14**	4-20 mA	0 ÷ 3 bar	with built-in pressure gauge 0-12
MX2-1/2-M*A20**	4-20 mA	0 ÷ 10 bar	without pressure gauge
MX2-1/2-M*A22**	4-20 mA	0 ÷ 10 bar	with built-in pressure gauge 0-6
MX2-1/2-M*A24**	4-20 mA	0 ÷ 10 bar	with built-in pressure gauge 0-12
MX2-1/2-M*A30**	4-20 mA	0 ÷ 1 bar	without pressure gauge
MX2-1/2-M*A32**	4-20 mA	0 ÷ 1 bar	with built-in pressure gauge 0-6
MX2-1/2-M*A34**	4-20 mA	0 ÷ 1 bar	with built-in pressure gauge 0-12
MX2-1/2-M*A40**	4-20 mA	0 ÷ 7 bar	without pressure gauge
MX2-1/2-M*A42**	4-20 mA	0 ÷ 7 bar	with built-in pressure gauge 0-6
MX2-1/2-M*A44**	4-20 mA	0 ÷ 7 bar	with built-in pressure gauge 0-12
MX2-1/2-M*V10-OX1**	0-10 V DC	0 ÷ 3 bar	without pressure gauge
MX2-1/2-M*V12-OX1**	0-10 V DC	0 ÷ 3 bar	with built-in pressure gauge 0-6
MX2-1/2-M*V14-OX1**	0-10 V DC	0 ÷ 3 bar	with built-in pressure gauge 0-12
MX2-1/2-M*V30-OX1**	0-10 V DC	0 ÷ 1 bar	without pressure gauge
MX2-1/2-M*V32-OX1**	0-10 V DC	0 ÷ 1 bar	with built-in pressure gauge 0-6
MX2-1/2-M*V34-OX1**	0-10 V DC	0 ÷ 1 bar	with built-in pressure gauge 0-12
MX2-1/2-M*V40-OX1**	0-10 V DC	0 ÷ 7 bar	without pressure gauge
MX2-1/2-M*V42-OX1**	0-10 V DC	0 ÷ 7 bar	with built-in pressure gauge 0-6
MX2-1/2-M*V44-OX1**	0-10 V DC	0 ÷ 7 bar	with built-in pressure gauge 0-12
MX2-1/2-M*A10-OX1**	4-20 mA	0 ÷ 3 bar	without pressure gauge
MX2-1/2-M*A12-OX1**	4-20 mA	0 ÷ 3 bar	with built-in pressure gauge 0-6
MX2-1/2-M*A14-OX1**	4-20 mA	0 ÷ 3 bar	with built-in pressure gauge 0-12
MX2-1/2-M*A30-OX1**	4-20 mA	0 ÷ 1 bar	without pressure gauge
MX2-1/2-M*A32-OX1**	4-20 mA	0 ÷ 1 bar	with built-in pressure gauge 0-6
MX2-1/2-M*A34-OX1**	4-20 mA	0 ÷ 1 bar	with built-in pressure gauge 0-12
MX2-1/2-M*A40-OX1**	4-20 mA	0 ÷ 7 bar	without pressure gauge
MX2-1/2-M*A42-OX1**	4-20 mA	0 ÷ 7 bar	with built-in pressure gauge 0-6
MX2-1/2-M*A44-OX1**	4-20 mA	0 ÷ 7 bar	with built-in pressure gauge 0-12

TABLE NOTES:

* = versions with or without external pilot supply

** = versions with our without relieving

LH = add LH at the end of the code for air inlet from the right to the left

PRESSURE REGULATOR FLOW DIAGRAMS - MANIFOLD VERSION

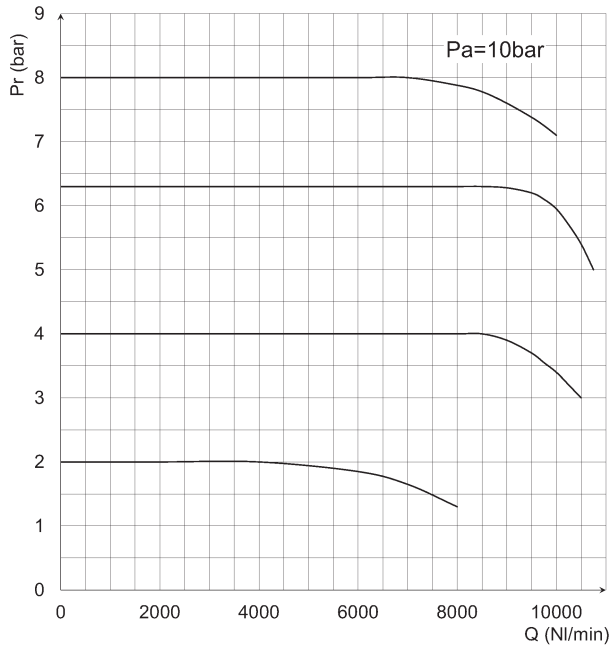

Pr = Regulated pressure
Q = Flow

Pa = Inlet pressure

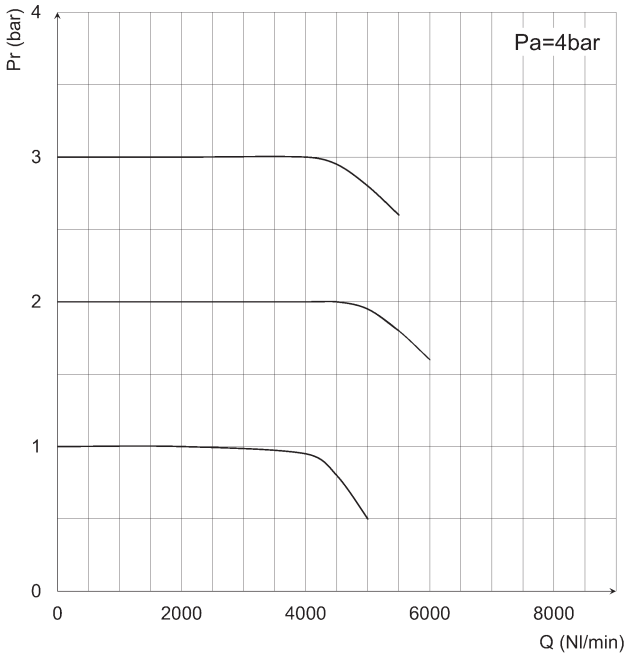

Pr = Regulated pressure
Q = Flow

Pa = Inlet pressure

EXHAUST FLOW DIAGRAM - MANIFOLD VERSION

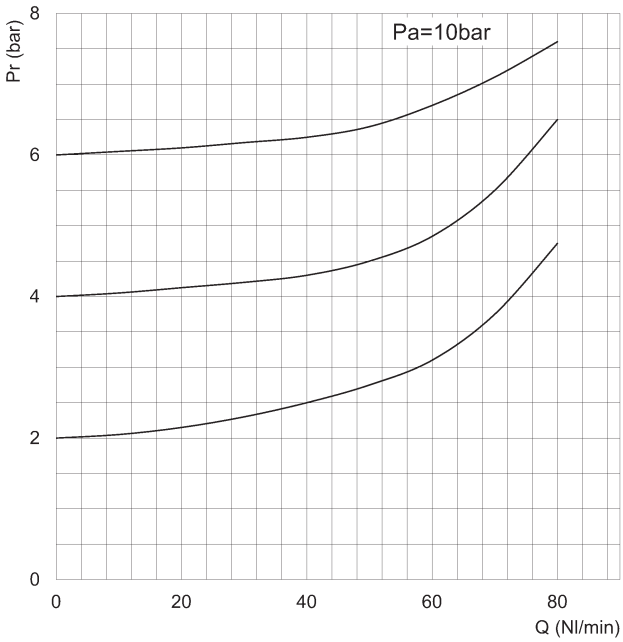

Pr = Regulated pressure
Q = Flow

Pa = Inlet pressure

PNEUMATIC SYMBOLS - MANIFOLD VERSION

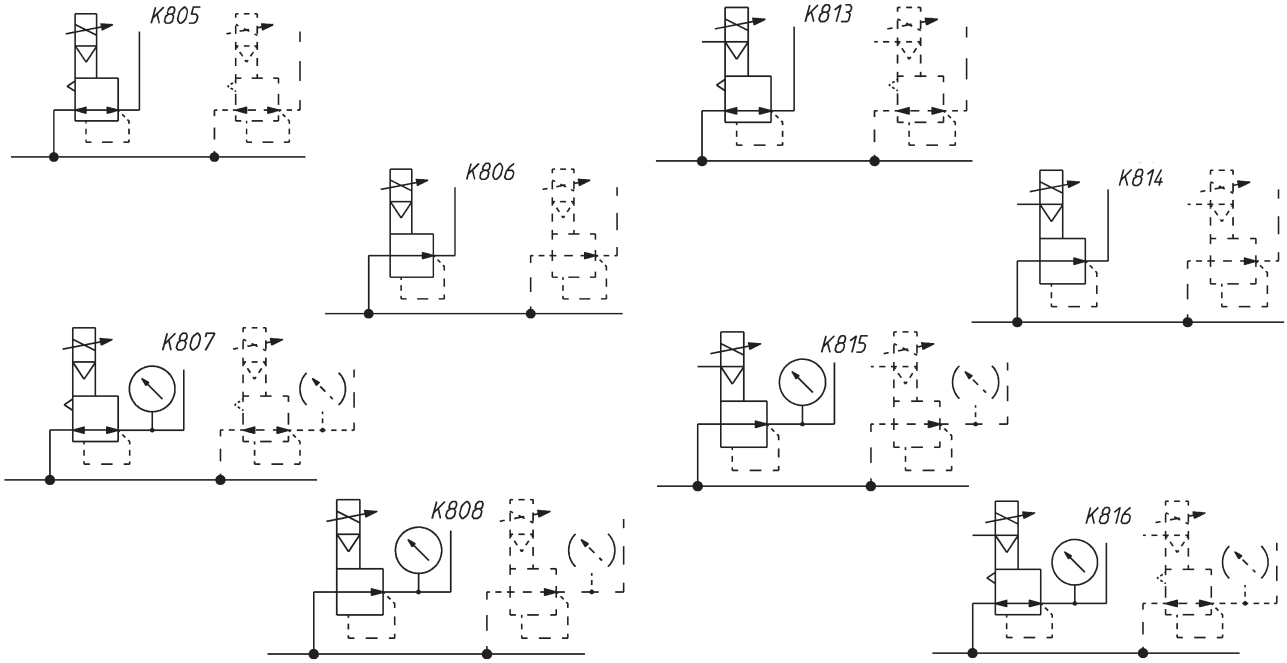

K805 = MANIFOLD reg., relieving, electrical command
K806 = MANIFOLD reg., NO relieving, electrical command
K807 = MANIFOLD reg., relieving, electrical command and built-in pressure gauge
K808 = MANIFOLD reg., NO relieving, electrical command and built-in pressure gauge

K813 = MANIFOLD reg., relieving, electrical command, and external servo pilot supply
K814 = MANIFOLD reg., NO relieving, electrical command, and external servo pilot supply
K815 = MANIFOLD reg., relieving, electrical command, built-in pressure gauge and external servo pilot supply
K816 = MANIFOLD reg., NO relieving, electrical command, built-in pressure gauge and external servo pilot supply

Series MX-PRO proportional flow valve

Male connector M8 4 poles
Pin 1: +24 V DC (Power supply)
Pin 2: Command analogical signal 0-10 V DC or 4-20 mA
Pin 3: 0 V (Ground) common also for the command signal
Pin 4: Output analogical signal (according to the regulated pressure)

5 red LED
6 green LED

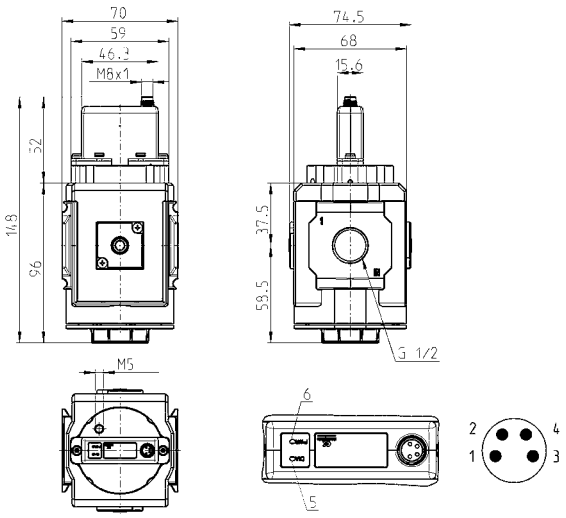

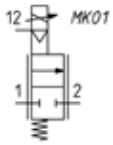

Mod.	Electrical command	Setting range
MX2-1/2-VEV810	0-10 V DC, external servo pilot supply	low flow
MX2-1/2-VEA810	4-20 mA, external servo pilot supply	low flow
MX2-1/2-VEV910	0-10 V DC, external servo pilot supply	high flow
MX2-1/2-VEA910	4-20 mA, external servo pilot supply	high flow
MX2-1/2-VEV810-LH	0-10 V DC, external servo pilot supply	low flow
MX2-1/2-VEA810-LH	4-20 mA, external servo pilot supply	low flow
MX2-1/2-VEV910-LH	0-10 V DC, external servo pilot supply	high flow
MX2-1/2-VEA910-LH	4-20 mA, external servo pilot supply	high flow
MX2-1/2-VEV810-OX1	0-10 V DC, external servo pilot supply	low flow
MX2-1/2-VEA810-OX1	4-20 mA, external servo pilot supply	low flow
MX2-1/2-VEV910-OX1	0-10 V DC, external servo pilot supply	high flow
MX2-1/2-VEA910-OX1	4-20 mA, external servo pilot supply	high flow
MX2-1/2-VEV810-LHOX1	0-10 V DC, external servo pilot supply	low flow
MX2-1/2-VEA810-LHOX1	4-20 mA, external servo pilot supply	low flow
MX2-1/2-VEV910-LHOX1	0-10 V DC, external servo pilot supply	high flow
MX2-1/2-VEA910-LHOX1	4-20 mA, external servo pilot supply	high flow

VALVE FLOW DIAGRAMS

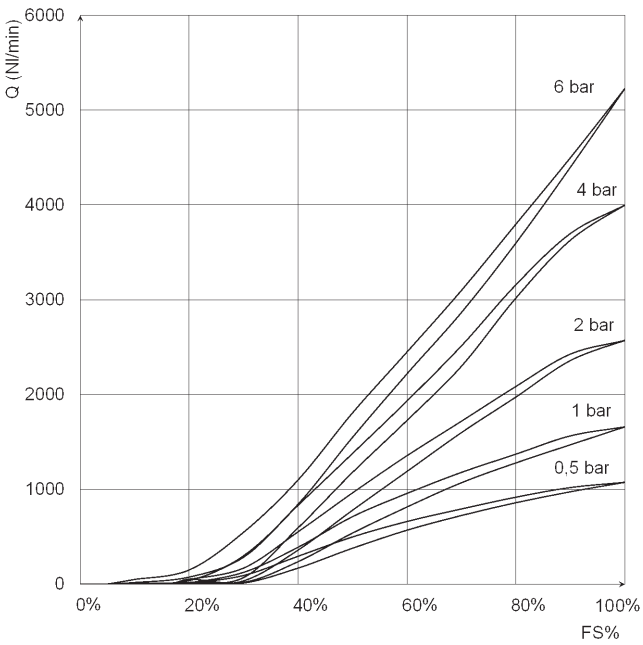

Low flow version

Q (Nl/min) = flow
FS% = full scale command signal

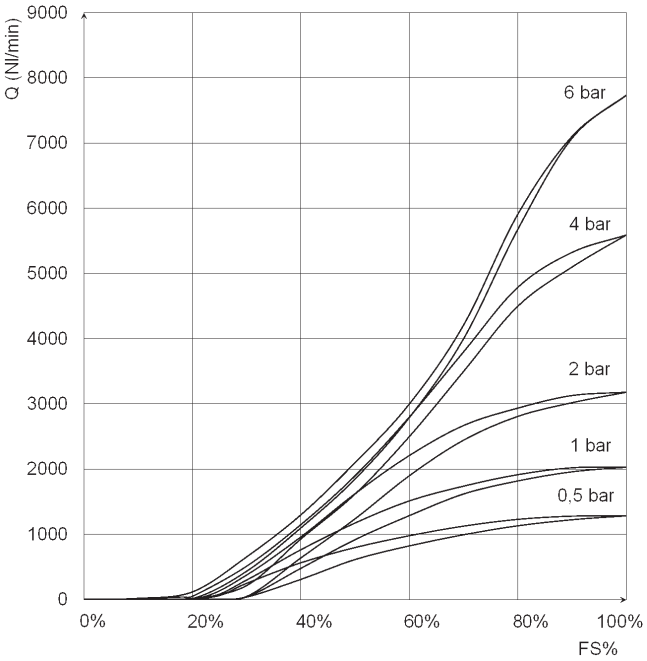

High flow

Q (Nl/min) = flow
FS% = full scale command signal

Series MX-PRO Manifold proportional flow valve

Male connector M8 4 poles
Pin 1: +24 V DC (Power supply)
Pin 2: Command analogical signal 0-10 V DC or 4-20 mA
Pin 3: 0 V (Ground) common also for the command signal
Pin 4: Output analogical signal (according to the regulated pressure)

5 red LED
6 green LED

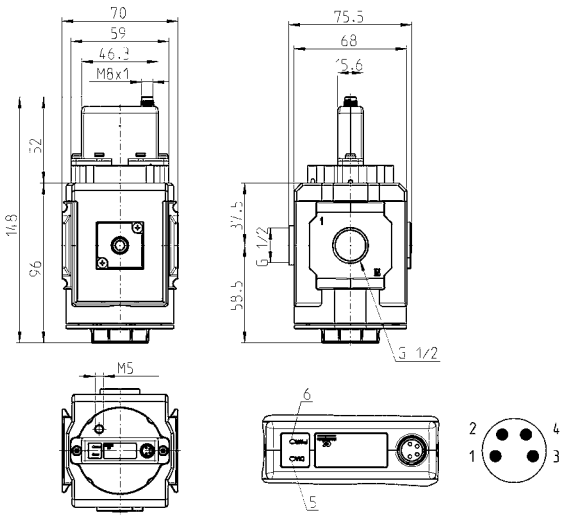

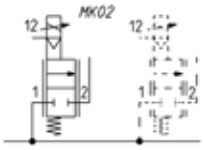

Mod.	Electrical command	Setting range
MX2-1/2-WEV810	0-10 V DC, external servo pilot supply	low flow
MX2-1/2-WEA810	4-20 mA, external servo pilot supply	low flow
MX2-1/2-WEV910	0-10 V DC, external servo pilot supply	high flow
MX2-1/2-WEA910	4-20 mA, external servo pilot supply	high flow
MX2-1/2-WEV810-LH	0-10 V DC, external servo pilot supply	low flow
MX2-1/2-WEA810-LH	4-20 mA, external servo pilot supply	low flow
MX2-1/2-WEV910-LH	0-10 V DC, external servo pilot supply	high flow
MX2-1/2-WEA910-LH	4-20 mA, external servo pilot supply	high flow
MX2-1/2-WEV810-OX1	0-10 V DC, external servo pilot supply	low flow
MX2-1/2-WEA810-OX1	4-20 mA, external servo pilot supply	low flow
MX2-1/2-WEV910-OX1	0-10 V DC, external servo pilot supply	high flow
MX2-1/2-WEA910-OX1	4-20 mA, external servo pilot supply	high flow
MX2-1/2-WEV810-LHOX1	0-10 V DC, external servo pilot supply	low flow
MX2-1/2-WEA810-LHOX1	4-20 mA, external servo pilot supply	low flow
MX2-1/2-WEV910-LHOX1	0-10 V DC, external servo pilot supply	high flow
MX2-1/2-WEA910-LHOX1	4-20 mA, external servo pilot supply	high flow

VALVE FLOW DIAGRAMS - MANIFOLD VERSION

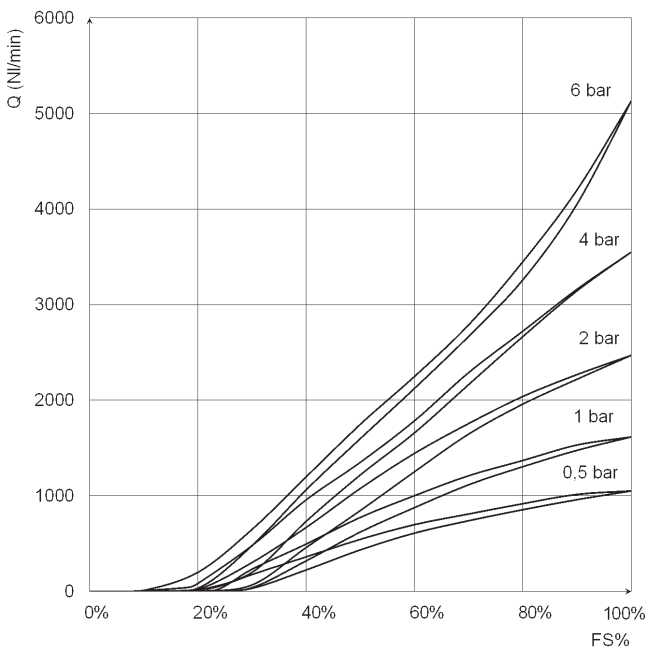

Low flow version

Q (Nl/min) = flow
FS% = full scale command signal

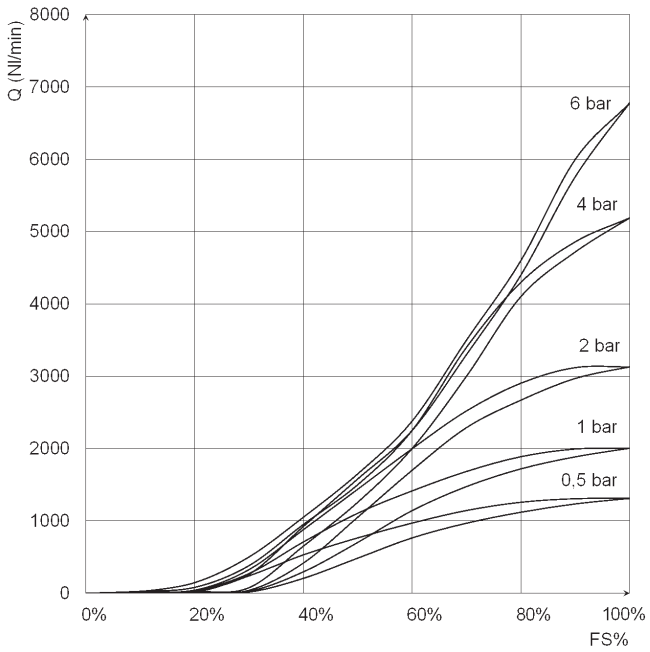

High flow version

Q (Nl/min) = flow
FS% = full scale command signal

Flow characteristic curve of a proportional valve

Q% = flow
FS% = full scale command signal

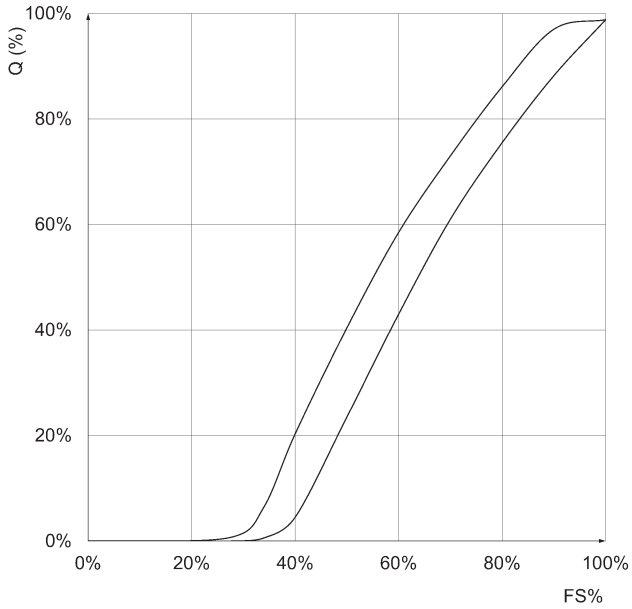

Valve maximum flow and response times

Maximum flow according to the inlet pressure

DIAGRAM LEGEND:

Q = flow (Nl/min)
P = inlet pressure (bar)

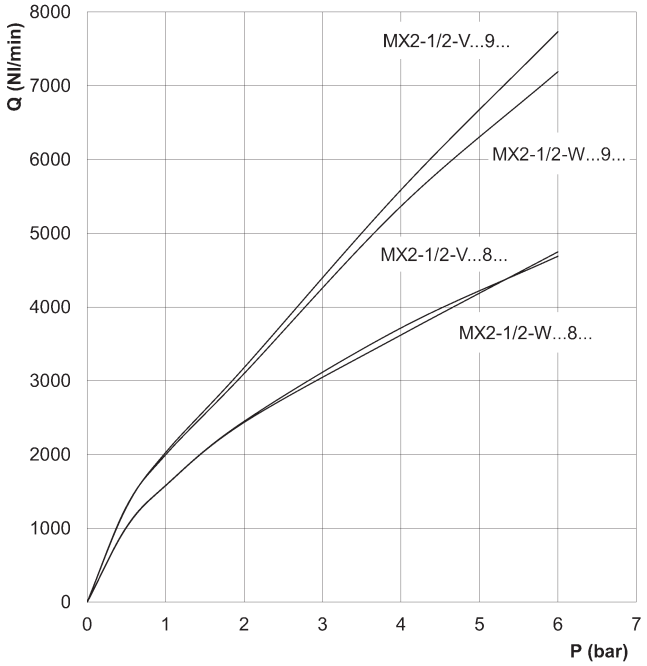

Pin	Type		Flow at steady speed [Nl/min]	Command [V]	Load response time (ms)				Exhaust response time (ms)			
					0-10%	0-50%	0-90%	0-99%	0-10%	0-50%	0-90%	0-99%
2 bar	Low flow	Standard	915	6	351	452.4	967.2	6240	171.6	284.7	487.5	624
		Manifold	1000	6.3	327.6	421.2	951.6	6162	249.6	366.6	577.2	780
	High flow	Standard	960	4.7	331.5	444.6	1279.2	6942	245.7	329.16	526.5	702
		Manifold	960	4.2	313	420	1156	9700	200	340	540	800
4 bar	Low flow	Standard	952	5.4	319.8	436.8	1029.6	7410	187.2	304.2	491.4	624
		Manifold	925	5.3	284.7	408.72	1474.2	6240	237.9	370.5	557.7	897
	High flow	Standard	970	4.4	279.24	429	1177.8	7878	225	351	526.5	741
		Manifold	940	3.8	230	400	1680	8500	175	360	580	900
Set flow: about 1000 Nl/min												

Rapid clamp kit

The kit MX2-X is supplied with:
1 rapid clamp, 1 O-ring OR 3125 *,
2 exagonal nuts M5, 2 screws M5x69.

The kit MX2-Z is supplied with:
1 rapid clamp, 1 O-ring OR 3125 *,
1 exagonal nut M5, 1 screw M5x69,
1 screw M5x85 for wall fixing.

* it can be ordered separately (cod. 160-39-11/19)

Materials: technopolymer clamp, NBR O-ring,
zinc-plated steel nuts and screws.

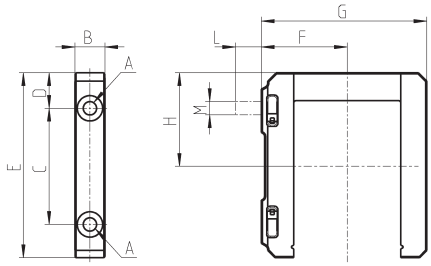

DIMENSIONS											
Mod.	A	B	C	D	E	F	G	H	L	M	Notes
MX2-X	5.2	12	46	14	73.5	37.5	70.5	37	-	-	
MX2-Z	5.2	12	46	14	73.5	37.5	70.5	37	14	M5	kit with wall fixing screw

Rapid clamp kit with wall fixing brackets

The kit MX2-Y is supplied with:
1 wall rapid clamp, 1 O-ring OR 3125 **, 2 exagonal nuts, 2 screws M5x69.

** it can be separately ordered (cod. 160-39-11/19)

Materials: technopolymer clamp, NBR O-ring,
zinc-plated steel nuts and screws.

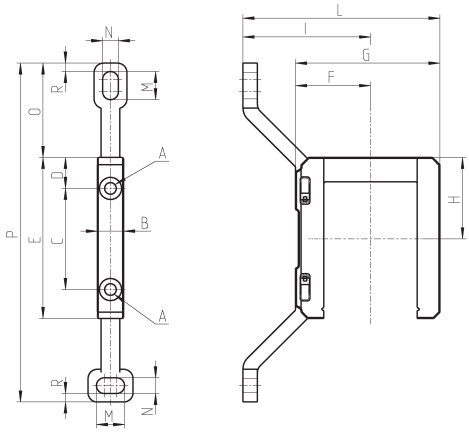

Mod.	A	B	C	D	E	F	G	H	I	L	M	N	O	P	R
MX2-Y	5,2	12	46	14	73,5	32,5	70,5	37	70,5	103	12	6,5	42	152	4

Terminal flanges (IN/OUT)

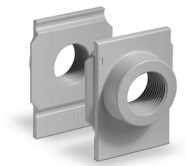

The kit is supplied with:
- 1 flange INLET side
- 1 flange OUTLET side

Materials: painted aluminium flanges.

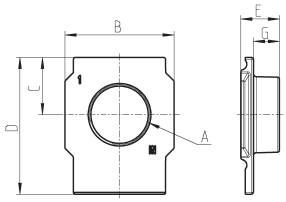

Mod.	A	B	C	D	E	G
MX2-1/2-FL	G1/2	50	26,5	63,5	17	11

Rapid clamps kit + flanges

Mod.	The kit is supplied with:
MX2-1/2-HH	1x MX2-1/2-FL + 2x MX2-X
MX2-1/2-JJ	1x MX2-1/2-FL + 2x MX2-Z

Rapid clamps kit with wall fixing brackets + flanges

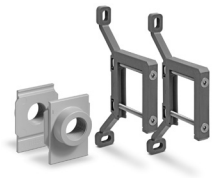

Mod.	The kit is supplied with:
MX2-1/2-KK	1x MX2-1/2-FL + 2x MX2-Y

Block for pressure gauge fixing

The kit is supplied with:
1 block
1 grain
2 screws
1 seal

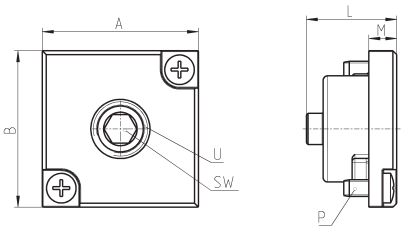

DIMENSIONS							
Mod.	A	B	L	M	P	U	SW
MX2-R26/1-P	28	28	16.5	5	M3X7	1/8	5

O-ring for assembling

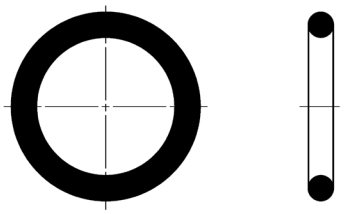

Mod.	O-ring	For assembly
160-39-11/19	OR 3125	MX2

Circular M8 4-pole connectors, Female

With PU sheathing, non shielded cable.
Protection class: IP65

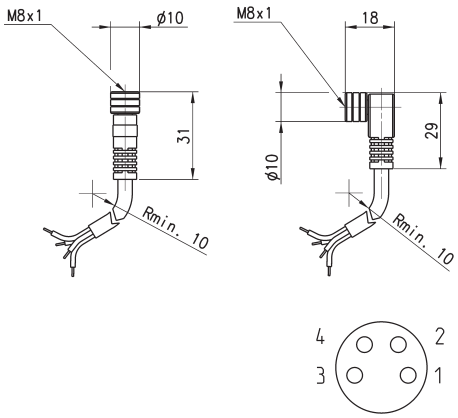

Mod.	Type of connector	Cable length (m)
CS-DF04EG-E200	straight	2
CS-DF04EG-E500	straight	5
CS-DR04EG-E200	right angle (90 degrees)	2
CS-DR04EG-E500	right angle (90 degrees)	5

Series ER100
digital electro-pneumatic regulators

Port G1/4

- Compact design
- Digital display
- Analog and digital input
- Programmable
- Zero/span adjustment function
- Error display function, pressure display
- Preset memory function 8-set points (3 bits).

GENERAL DATA ER104-5xxx

Model	ER104-5 0/1/2 X Analog type	ER104-5 P X Parallel type
Fluid	filtered compressed air, unlubricated, according to ISO 8573-1 class 3.4.3, inert gas	filtered compressed air, unlubricated, according to ISO 8573-1 class 3.4.3, inert gas
Max. working pressure	7 bar	7 bar
Min. working pressure	Control pressure + max. control pressure x 0,2	Control pressure + max. control pressure x 0,2
Pressure control range	0,3 ÷ 5 bar	0,3 ÷ 5 bar
Class protection	IP40	IP40
Power supply voltage	24 V DC +/- 10% (stabilized power supply with a ripple rate of 1% or less)	24 V DC +/- 10% (stabilized power supply with a ripple rate of 1% or less)
Consumption current	0.15 A (or less rush current 0.6 A or less when power is turned on)	0.15 A (or less rush current 0.6 A or less when power is turned on)
Input signal **(Input impendance)**	0 ÷ 10 V DC (6,7 kΩ) 0 ÷ 5 V DC (10 kΩ) 4 ÷ 20 mA DC (250 Ω)	10 bit
Preset input	8 points	N/A
Output signal **Note 1**	Analog output 1-5 VDC (load to be connected impedance 500 kW or more) Switch output NPN or PNP, open collector output, 30 V or less, 50 mA or less, voltage drop 2.4 or less, compatible for use with PLC or Relay	Analog output 1-5 VDC (load to be connected impedance 500 kW or more) Switch output NPN or PNP, open collector output, 30 V or less, 50 mA or less, voltage drop 2.4 or less, compatible for use for PLC or Relay
Error Output signal	NPN or PNP open collector output, 30 V or less, 50 mA or less, voltage drop 2,4 V or less, compatible for use with PLC or Relay	NPN or PNP open collector output, 30 V or less, 50 mA or less, voltage drop 2,4 V or less, compatible for use with PLC or Relay
Direct memory setting	0,05 ÷ 5 bar minimum input width 0,01 bar	0,05 ÷ 5 bar minimum input width 0,01 bar
Hysteresis **Note 2**	0.5% F.S. or less	0.5% F.S. or less
Linearity **Note 2**	±0.3% F.S. or less	±0.3% F.S. or less
Resolution **Note 2**	0.2% F.S. or less	0.2% F.S. or less
Repeatability **Note 2**	0.3% F.S. or less	0.3% F.S. or less
Temperature characteristics: **Zero point fluctation**	0.15% F.S./°C or less	0.15% F.S./°C or less
Temperature characteristics: **Span point fluctation**	0.07% F.S./°C or less	0.07% F.S./°C or less
Max. flow rate (ANR) **Note 3**	400 l/min (see diagram)	400 l/min (see diagram)
Step response time **No load** **Note 4**	0.2 sec. or less	0.2 sec. or less
Step response time **1000 cm³ load** **Note 4**	0.8 sec. or less	0.8 sec. or less
Mechanical vibration proof	98 m/s² or less	98 m/s² or less
Ambient temperature	5°C ÷ 50 °C	5°C ÷ 50 °C
Fluid temperature	5°C ÷ 50 °C	5°C ÷ 50 °C
Connection port size	G1/4	G1/4
Mounting direction	Free	Free
Weight	250g	250g
Note 1:	Select either analog or switch output.	
Note 2:	This characteristic is guaranteed within a regulation range between 10 and 90% of the full scale, with a power voltage of 24V±10%, a supply pressure of 1 bar higher compared with the set pressure (ex. regulation of 3 bar, supply pressure of 3+1 = 4 bar) and a volume connected to the outlet without any loss. In applications with great air consumption, such as the blowing, the indicated tolerance may change.	
Note 3:	The above apply when working pressure and control pressure are maximum	
Note 4:	The above apply when working pressure is maximum and the step is as follows: 50% F.S. -> 100%F.S. 50% F.S. -> 60% F.S. 50% F.S. -> 40% F.S.	

CAMOZZI Automation

GENERAL DATA ER104-9xxx

Model	ER104-9 0/1/2 X Analog type	ER104-9P X Parellel type
Fluid	Filtered air according to ISO 132	Filtered air according to ISO 132
Max. working pressure	10 bar	10 bar
Min. working pressure	Control pressure + Max. control pressure + 1 bar	Control pressure + Max. control pressure + 1 bar
Pressure control range	0,5 ÷ 9 bar	0,5 ÷ 9 bar
Class protection	IP40	IP40
Power supply voltage	DC24V ± 10% (stabilized power supply with a ripple rate of 1% or less)	DC24V ± 10% (stabilized power supply with a ripple rate of 1% or less)
Consumption current	0.15 A or less rush current 0.6 A or less when power is turned on	0.15 A or less rush current 0.6 A or less when power is turned on
Input signal **(Input impedance)**	0 a 10 VDC (6.7kΩ) 0 a 5 VDC (10kΩ) 4 a 20 mADC (250 Ω)	10 bit
Preset input	8 points	N/A
Output signal **Note 1**	Analog output 1-5 VDC (load to be connected impedance 500 KW or more) Switch output NPN or PNP, open collector output, 30 V or less, 50 mA or less voltage drop 2.4.V or less, compatible for usage in PLC and Relay.	Analog output 1-5 VDC (load to be connected impedance 500 KW or more) Switch output NPN or PNP, open collector output, 30 V or less, 50 mA or less, voltage drop 2.4.V or less, compatible for usage in PLC and Relay.
Error output signal	NPN or PNP, open collector output, 30 V or less, 50 mA or less, voltage drop 2.4 or less, compatible for usage in PLC and Relay	NPN or PNP, open collector output, 30 V or less, 50 mA or less, voltage drop 2.4 or less, compatible for usage in PLC and Relay
Direct memory setting	0,05 ÷ 9 bar minimum input width 0,01 bar setting resolution 0,02 bar	0,05 ÷ 9 bar minimum input width 0,01 bar setting resolution 0,02 bar
Hysteresis **Note 2**	0.5% F.S. or less	0.5% F.S. or less
Linearity **Note 2**	±0.3% F.S. or less	±0.3% F.S. or less
Resolution **Note 2**	0.2% F.S. or less	0.2% F.S. or less
Repeatability **Note 2**	0.3% F.S. or less	0.3% F.S. or less
Temperature characteristics: **Zero point fluctuation**	0.15% F.S./°C or less	0.15% F.S./°C or less
Temperature characteristics: **Span point fluctuation**	0.07% F.S./°C or less	0.07% F.S./°C or less
Max. flow rate **Note 3**	400 l/min (see diagram)	400 l/min (see diagram)
Step response time **No load** **Note 4**	0.82 sec. or less	0.2 sec. or less
Step response time **1000 cm³ load** **Note 4**	0.8 sec. or less	0.8 sec. or less
Mechanical vibration proof	98 m/s² or less	98 m/s² or less
Ambient temperature	5°C ÷ 50 °C	5°C ÷ 50 °C
Fluid temperature	5°C ÷ 50 °C	5°C ÷ 50 °C
Connecting port size	G1/4	G1/4
Mounting direction	Free	Free
Weight	250g	250g
Note 1	Select either analog or switch output.	
Note 2	This characteristic is guaranteed within a regulation range between 10 and 90% of the full scale, with a power voltage of 24V±10%, a supply pressure of 1 bar higher compared with the set pressure (ex. regulation of 3 bar, supply pressure of 3+1 = 4 bar) and a volume connected to the outlet without any loss. In applications with great air consumption, such as the blowing, the indicated tolerance may change.	
Note 3	The above apply when working pressure and control pressure are maximum.	
Note 4	The above apply when working pressure and control pressure is maximum and the step is as follows: 50% F.S. -> 100%F.S. 50% F.S. -> 60% F.S. 50% F.S. -> 40% F.S.	

STANDARD CODES

Models				
ER104-50AP	ER104-52AP	ER104-5PSP	ER104-90SP	ER104-92SP
ER104-50SP	ER104-52SP	ER 104-90AP	ER104-92AP	ER104-9PSP

CODING EXAMPLE

ER	1	04	-	5	0	AN

ER	SERIES
1	SIZE: 1 = size 1
04	PORT: 04 = G1/4
5	WORKING PRESSURE: 5 = 0 ÷ 5 bar 9 = 0.5 ÷ 9 bar
0	INPUT: 0 = 0 - 10 V DC 1 = 0 - 5 V DC 2 = 4 - 20 mA P = Parallel 10 bit
AN	OUTPUT: AN = 1 - 5 V analog, error (NPN) AP = 1 - 5 V analog, error (PNP) SN = switch (NPN), error (NPN) SP = switch (PNP), error (PNP)

DIAGRAMS

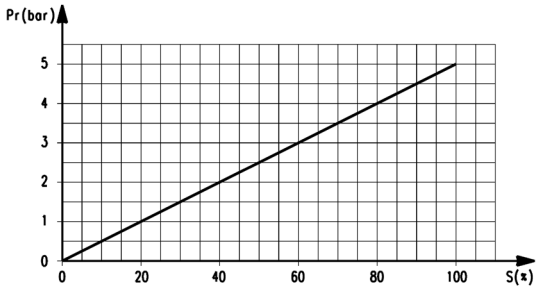

ER104-5xxx
Input/Output characteristics

Pr = outlet pressure (bar)
S = input signal (%)

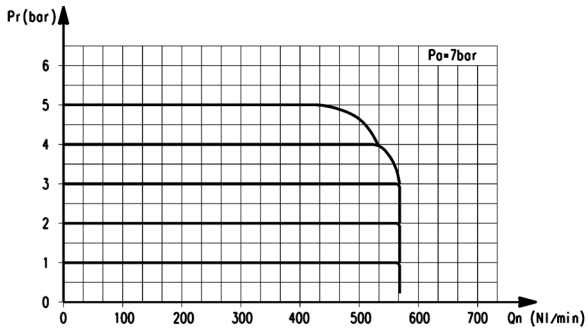

ER104-5xxx
Flow characteristics

Pr = outlet pressure (bar)
Qn = flow (l/min)
Pa = operating pressure (bar)

DIAGRAMS

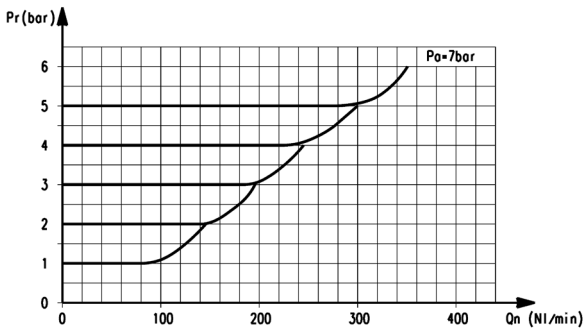

ER104-5xxx
Exhaust characteristics

Pr = outlet pressure (bar)
Qn = flow (l/min)
Pa = operating pressure (bar)

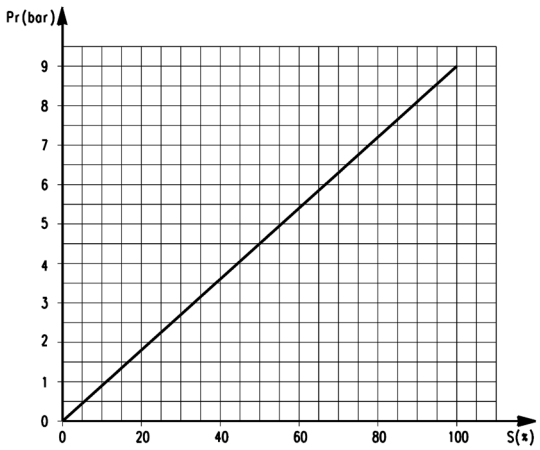

ER104-9xxx
Input/Output characteristics

Pr = outlet pressure (bar)
S = input signal (%)

DIAGRAMS

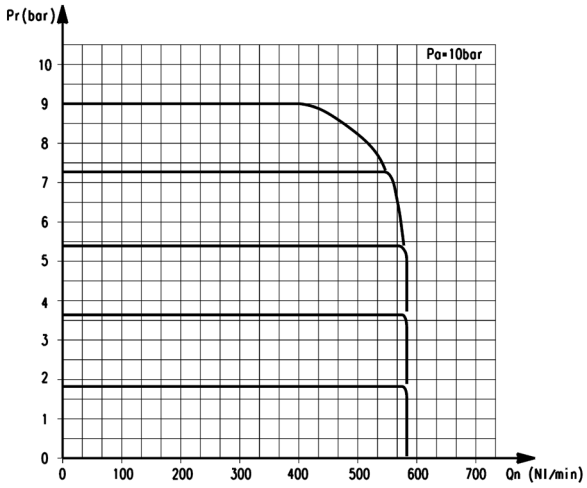

ER104-9xxx
Flow characteristics

Pr = outlet pressure (bar)
Qn = flow (l/min)
Pa = operating pressure (bar)

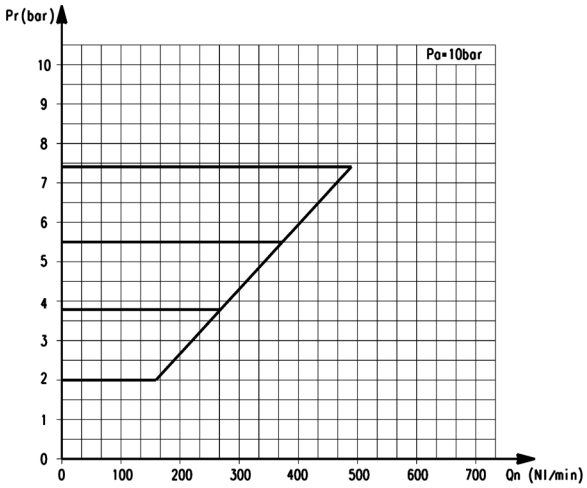

ER104-9xxx
Exhaust characteristics

Pr = outlet pressure (bar)
Qn = flow (l/min)
Pa = operating pressure (bar)

Proportional regulator Series ER100

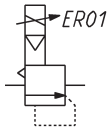

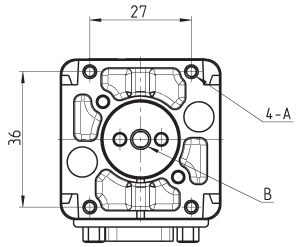

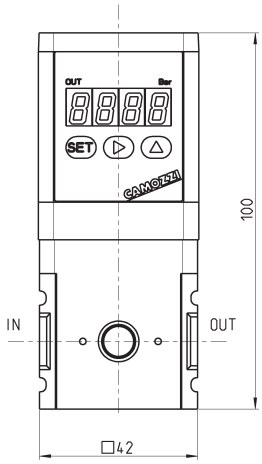

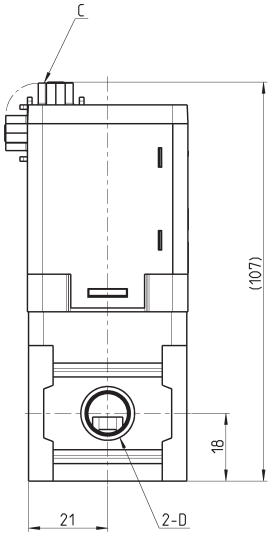

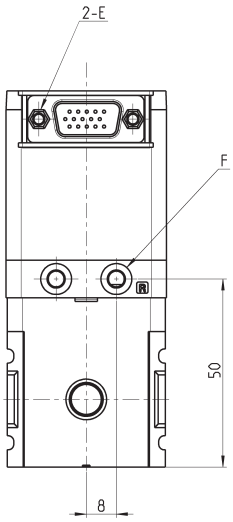

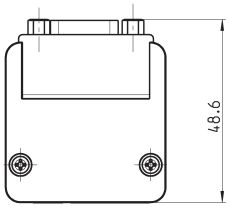

DIMENSIONS						
Mod.	A	B	C	D	E	F
ER104	M3 depth 6	Ø5.3 EXH port	D sub-connector 15 pins/plugs	G1/4	4-40 UNC	Ø4.2 Port R (pilot air exhaust port)

Bracket ER1-B1

Floor installation type

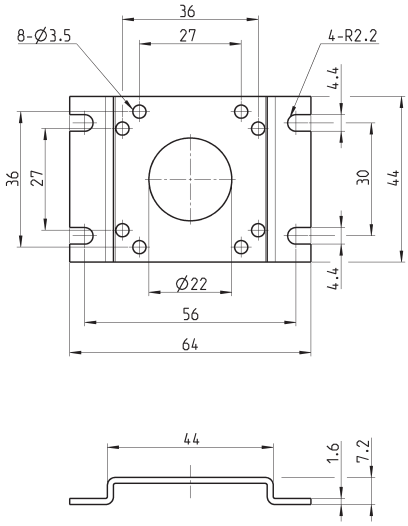

DIMENSIONS
Mod.
ER1-B1

Bracket ER1-B2

Wall installation type

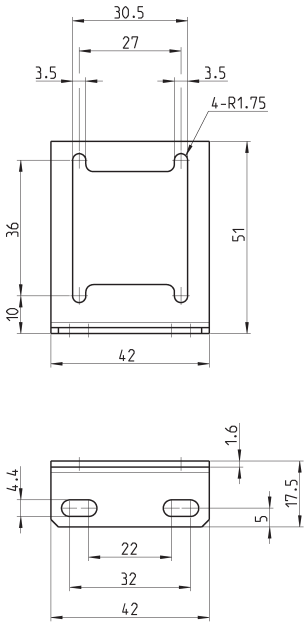

DIMENSIONS
Mod.
ER1-B2

Cable and connector for regulator with analog Input

To check the correspondence between pin and cables' colour, please refer to the instruction sheet included in the packaging or to the user manual.

1 = shield wire*
2 = 9-AWG26

* Connect the shield wire to the power's minus (0 V) side.

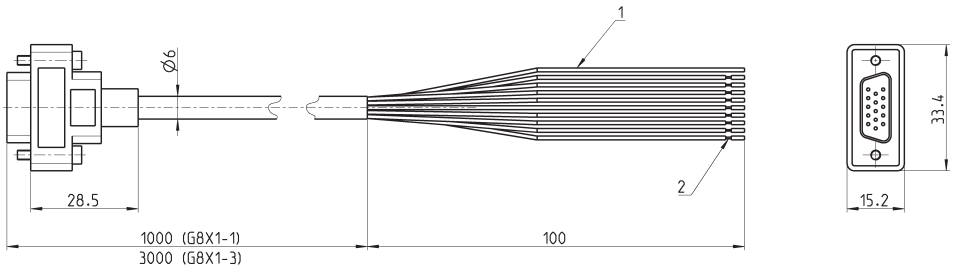

Mod.
G8X1-1
G8X1-3

Cable and connector for regulator with parallel Input

To check the correspondence between pin and cables' colour, please refer to the instruction sheet included in the packaging or to the user manual.

1 = shield wire*
2 = 9-AWG26

* Connect the shield wire to the power's minus (0 V) side.

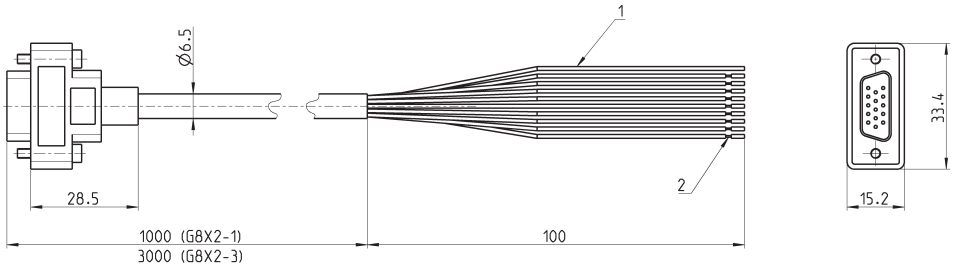

Mod.
G8X2-1
G8X2-3

Series ER200
digital electro-pneumatic regulators

Ports G1/4 and G3/8

- Compact design
- Digital display
- Analog and digital input
- Programmable
- Zero/span adjustment function
- Error display function, pressure display
- Preset memory function 8-set points (3 bits).

GENERAL DATA ER2XX-5XXX

Model	ER204-5 0/1/2 X ER238-5 0/1/2 X Analog type	ER204-5P X ER238-5P X Parallel type
Fluid	filtered compressed air, unlubricated, according to ISO 8573-1 class 3.4.3, inert gas	filtered compressed air, unlubricated, according to ISO 8573-1 class 3.4.3, inert gas
Max. working pressure	7 bar	7 bar
Min. working pressure	Control pressure + max. control pressure + 1 bar	Control pressure + max. control pressure + 1 bar
Pressure control range	0,3 ÷ 5 bar	0,3 ÷ 5 bar
Class protection	IP40	IP40
Power supply voltage	DC24V ± 10% (stabilized power supply with a ripple rate of 1% or less)	DC24V ± 10% (stabilized power supply with a ripple rate of 1% or less)
Consumption current	0.15 A (rush current 0.6 A or less)	0.15 A (rush current 0.6 A or less)
Input signal(Input Impedance)	0 to 10 VDC (6.7k Ω) 0 to 5 VDC (10k Ω) 4 to 20 mADC (250 Ω)	10 bit
Preset input	8 points	N/A
Output signal **Note 1**	Analog output 1-5 VDC (load to be connected impedance 500 kΩ or more) Switch output NPN or PNP, open collector output, 30 V, 50 mA, voltage drop 2.4 V, compatible for usage in PLC and Relay.	Analog output 1-5 VDC (load to be connected impedance 500 kΩ or more) Switch output NPN or PNP, open collector output, 30 V, 50 mA, voltage drop 2.4 V, compatible for usage in PLC and Relay.
Error output signal	NPN or PNP, open collector, 30 V, 50 mA, voltage drop 2.4 V, compatible for usage in PLC and Relay.	NPN or PNP, open collector, 30 V, 50 mA, voltage drop 2.4 V, compatible for usage in PLC and Relay.
Direct memory setting	0,05 ÷ 5 bar minimum input width 0,01 bar	0,05 ÷ 5 bar minimum input width 0,01 bar
Hysteresis **Note 2**	0.5% F.S. or less	0.5% F.S. or less
Linearity **Note 2**	±0.3% F.S. or less	±0.3% F.S. or less
Resolution **Note 2**	0.2% F.S. or less	0.2% F.S. or less
Repeatability **Note 2**	0.3% F.S. or less	0.3% F.S. or less
Temperature characteristics: **zero point fluctuation**	0.15% F.S./°C or less	0.15% F.S./°C or less
Temperature characteristics: **span point fluctuation**	0.07% F.S./°C or less	0.07% F.S./°C or less
Max. flow rate(ANR) **Note 3**	1500 l/min	1500 l/min
Step response time: **no load**	0.2 sec. or less	0.2 sec. or less
Step response time: **With load 1000 cm³**	0.8 sec. or less	0.8 sec. or less
Mechanical vibration proof	98 m/s² or less	98 m/s² or less
Ambient temperature	5°C ÷ 50 °C	5°C ÷ 50 °C
Fluid temperature	5°C ÷ 50 °C	5°C ÷ 50 °C
Connecting port size **IN/OUT**	G1/4 - G3/8	G1/4 - G3/8
Connecting port size **EXHAUST**	G3/8	G3/8
Mounting	Free	Free
Weight	450g	450g
Note 1:	Select either analog or switch output.	
Note 2:	This characteristic is guaranteed within a regulation range between 10 and 90% of the full scale, with a power voltage of 24V±10%, a supply pressure of 1 bar higher compared with the set pressure (ex. regulation of 3 bar, supply pressure of 3+1 = 4 bar) and a volume connected to the outlet without any loss. In applications with great air consumption, such as the blowing, the indicated tolerance may change.	
Note 3:	The above apply when working pressure and control pressure are maximum.	
Nota 4:	The above apply when working pressure is maximum and the step is as follows: 50% F.S. -> 100% F.S. 50% F.S. -> 60% F.S. 50% F.S. -> 40% F.S.	

GENERAL DATA ER2XX-9XXX

Model	ER204-9 0/1/2 X ER238-9 0/1/2 X Analog type	ER238-9P X ER238-9P X Parallel type
Fluid	Cleaned air	Cleaned air
Max. working pressure	10 bar	10 bar
Min. working pressure	Control pressure + max. control pressure + 1 bar	Control pressure + max. control pressure + 1 bar
Pressure control range	0,5 - 9 bar	0,5 - 9 bar
Class protection	IP40	IP40
Power supply voltage	DC24V ± 10% (stabilized power supply with a ripple rate of 1% or less)	DC24V ± 10% (stabilized power supply with a ripple rate of 1% or less)
Consumption current	0.15 A (rush corrent 0.6 A or less)	0.15 A (rush corrent 0.6 A or less)
Input signal **(Input impedance)**	0 to 10 VDC (6.7kΩ) 0 to 5 VDC (10kΩ) 4 to 20 mADC (250Ω)	10 bit
Preset input	8 points	N/A
Output signal	Analog output 1-5 VDC (load to be connected impedance 500 kΩ) Switch output NPN or PNP, open collector, 30 V, 50 mA, voltage drop 2.4 V, compatible for usage in PLC and Relay	Analog output 1-5 VDC (load to be connected impedance 500 kΩ) Switch output NPN or PNP, open collector, 30 V, 50 mA, voltage drop 2.4 V, compatible for usage in PLC and Relay
Error output signal	NPN or PNP, open collector, 30 V, 50 mA, voltage drop 2.4 V, compatible for usage in PLC and Relay	NPN or PNP, open collector, 30 V, 50 mA, voltage drop 2.4 V, compatible for usage in PLC and Relay
Direct memory setting	0,05 - 9 bar - min. input 0,01 bar max. error 0,02 bar	0,05 - 9 bar - min. input 0,01 bar max. error 0,02 bar
Hysteresis **Note 2**	0.5% F.S. or less	0.5% F.S. or less
Linearity **Note 2**	±0.3% F.S. or less	±0.3% F.S. or less
Resolution **Note 2**	0.2% F.S. or less	0.2% F.S. or less
Repeatability **Note 2**	0.3% F.S. or less	0.3% F.S. or less
Temperature characteristics: **Zero point fluctuation**	0.15% F.S./°C or less	0.15% F.S./°C or less
Temperature characteristics: **Span point fluctuation**	0.07% F.S./°C or less	0.07% F.S./°C or less
Max. flow rate(ANR) **Note 3**	1500 l/min	1500 l/min
Step response time **No load**	0.2 sec. or less	0.2 sec. or less
Step response time **Load 1000 cm³**	0.8 sec. or less	0.8 sec. or less
Mechanical vibration proof	98 m/s²	98 m/s²
Ambient temperature	5 to 50 °C	5 to 50 °C
Fluid temperature	5 to 50 °C	5 to 50 °C
Connecting port size **IN/OUT**	G1/4 - G3/8	G1/4 - G3/8
Connecting port size **EXHAUST**	G3/8	G3/8
Mounting	Free	Free
Weight	450g	450g
Note 1:	Select either analog or switch output	
Note 2:	This characteristic is guaranteed within a regulation range between 10 and 90% of the full scale, with a power voltage of 24V±10%, a supply pressure of 1 bar higher compared with the set pressure (ex. regulation of 3 bar, supply pressure of 3+1 = 4 bar) and a volume connected to the outlet without any loss. In applications with great air consumption, such as the blowing, the indicated tolerance may change.	
Note 3:	The above apply when working pressure and control pressure are maximum.	
Note 4:	The above apply when working pressure is maximum and the step is as follows: 50% F.S. -> 100% F.S. 50% F.S. -> 60% F.S. 50% F.S. -> 40% F.S.	

STANDARD CODES

Models				
ER238-50AP	ER238-52AP	ER238-5PSP	ER238-90SP	ER238-92SP
ER238-50SP	ER238-52SP	ER238-90AP	ER238-92AP	ER238-9PSP

CODING EXAMPLE

ER	2	04	-	5	0	AN

ER	SERIES
2	SIZE: 2 = size 2
04	PORT: 04 = G1/4 38 = G3/8
5	WORKING PRESSURE: 5 = 0 ÷ 5 bar 9 = 0.5 ÷ 9 bar
0	INPUT: 0 = 0 - 10 V DC 1 = 0 - 5 V DC 2 = 4 - 20 mA P = Parallel 10 bit
AN	OUTPUT: AN = 1 - 5 V analog error (NPN) AP = 1 - 5 V analog, error (PNP) SN = switch(NPN), error(NPN) SP = switch (PNP), error (PNP)

DIAGRAMS

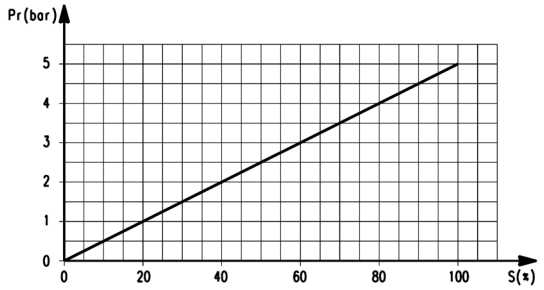

ER2xx-5xxx
Input/Output characteristics

Pr = outlet pressure (bar)
S = input signal (%)

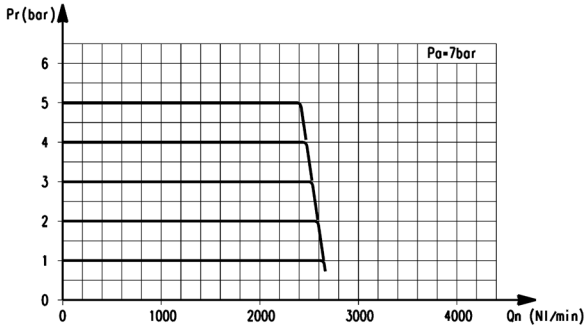

ER204-5xxx
Flow characteristics

Pr = outlet pressure (bar)
Qn = flow (l/min)
Pa = working pressure (bar)

DIAGRAMS

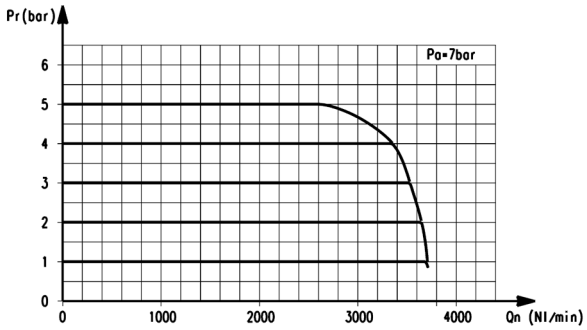

ER238-5xxx
Flow characteristics

Pr = outlet pressure (bar)
Qn = flow (l/min)
Pa = working pressure (bar)

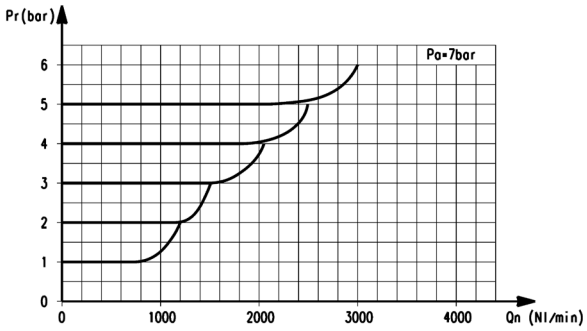

ER2xx-5xxx
Exhaust characteristics

Pr = outlet pressure (bar)
Qn = flow (l/min)
Pa = working pressure (bar)

DIAGRAMS

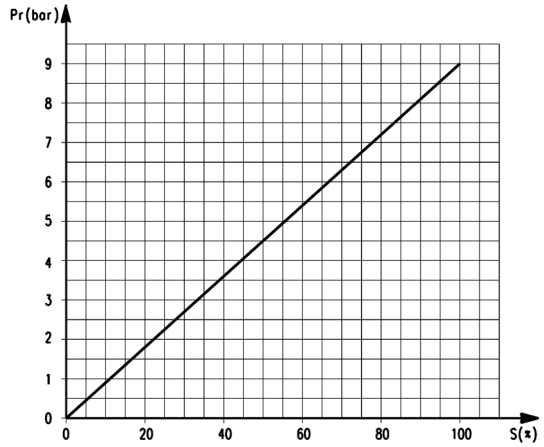

ER2xx-9xxx
Input/Output characteristics

Pr = output pressure (bar)
S = inlet signal (%)
Pa = working pressure (bar)

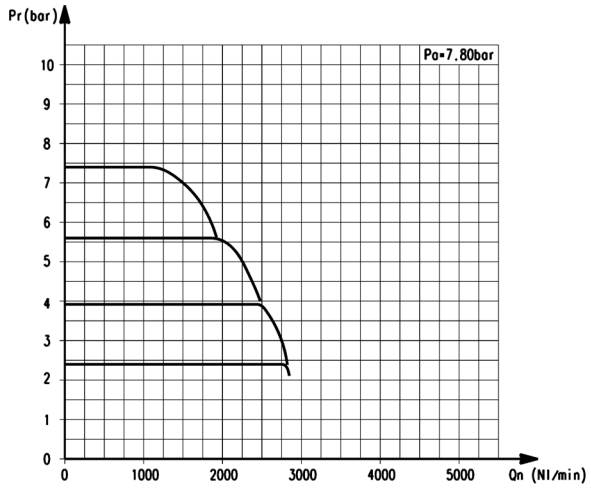

ER204-9xxx
Flow characteristics
Pr = output pressure (bar)
Qn = flow (l/min)
Pa = working pressure (bar)

DIAGRAMS

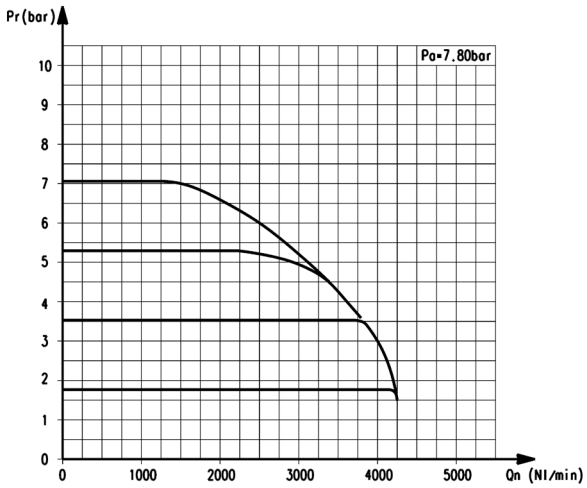

ER238-9xxx
Flow characteristics

Pr = output pressure (bar)
Qn = flow (l/min)
Pa = working pressure (bar)

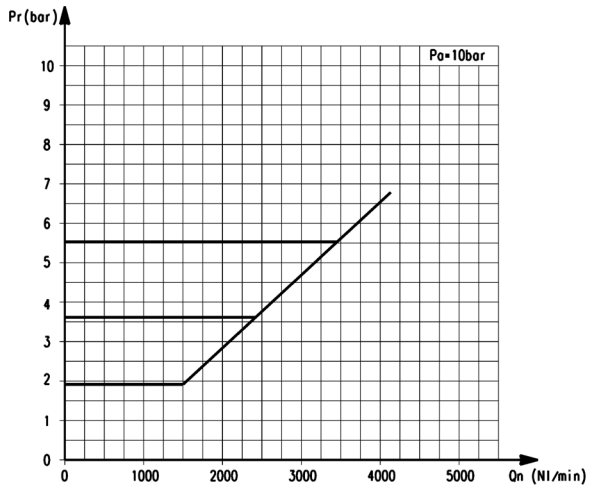

ER2xx-9xxx
Exhaust characteristics

Pr = output pressure (bar)
Qn = flow (l/min)
Pa = working pressure (bar)

Proportional regulators Series ER200

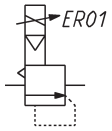

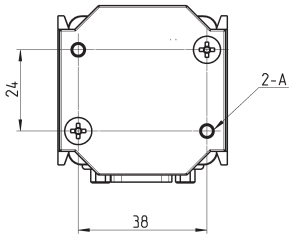

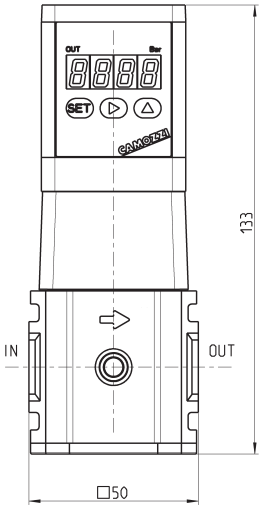

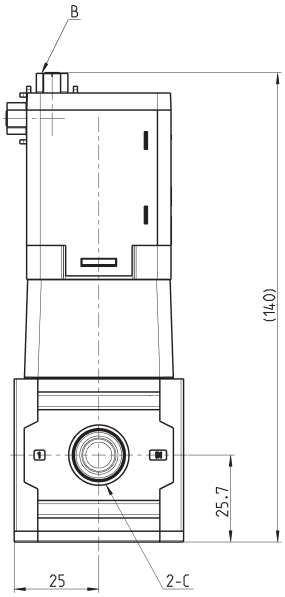

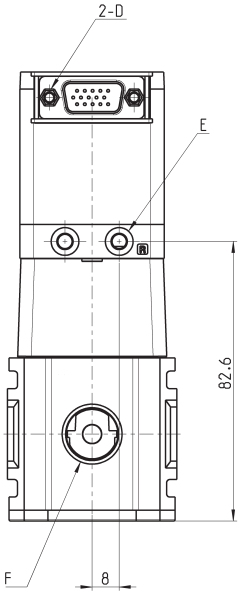

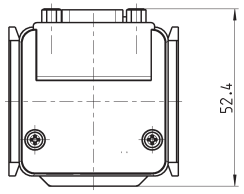

DIMENSIONS						
Mod.	A	B	C	D	E	F
ER204	M4 depth 12	D sub-connector 15 pins/plugs	G1/4	4-40 UNC	Ø4.2 Port R (pilot air exhaust port)	G3/8 EXH port
ER238	M4 depth 12	D sub-connector 15 pins/plugs	G3/8	4-40 UNC	Ø4.2 Port R (pilot air exhaust port)	G3/8 EXH port

Bracket ER2-B1

Floor installation type mounting

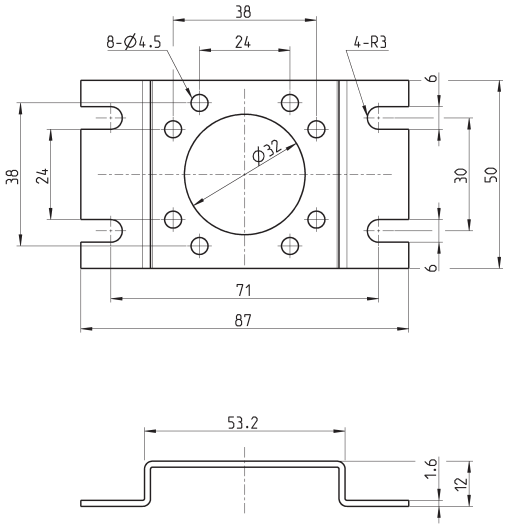

Mod.
ER2-B1

Bracket ER2-B2

Wall installation type mounting

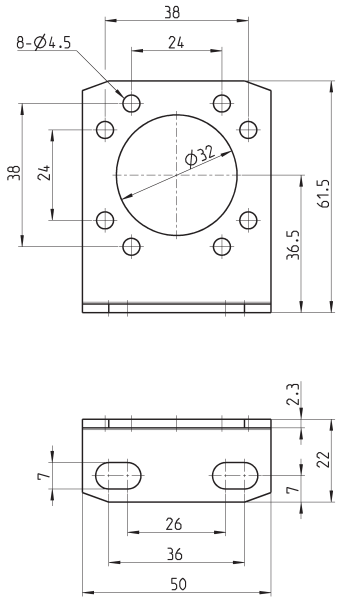

Mod.
ER2-B2

Cable and connector for regulator with analog Input

To check the correspondence between pin and cables' colour, please refer to the instruction sheet included in the packaging or to the user manual.

1 = shield wire*
2 = 9-AWG26

* Connect the shield wire to the power's minus (0 V) side.

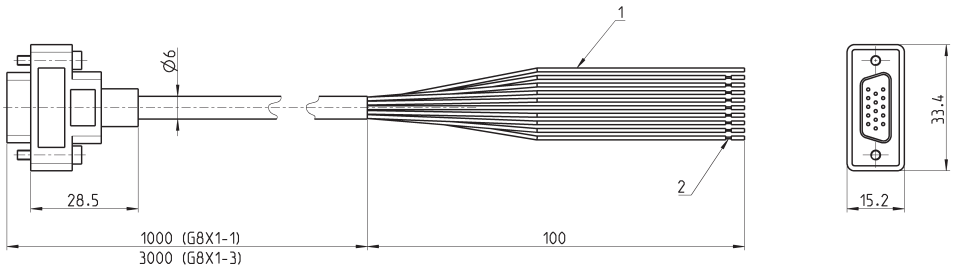

Mod.
G8X1-1
G8X1-3

Cable and connector for regulator with parallel Input

To check the correspondence between pin and cables' colour, please refer to the instruction sheet included in the packaging or to the user manual.

1 = shield wire*
2 = 9-AWG26

* Connect the shield wire to the power's minus (0 V) side.

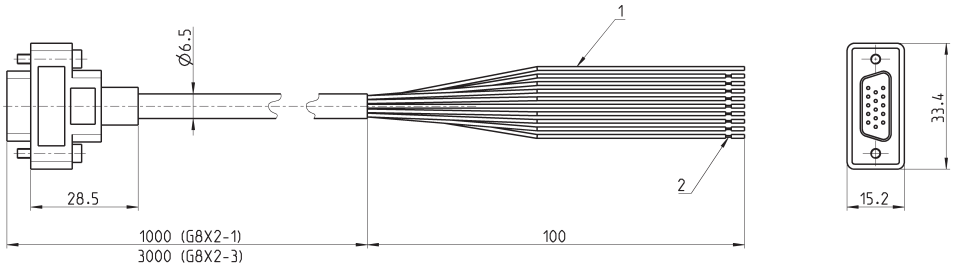

Mod.
G8X2-1
G8X2-3

CAMOZZI Automation

NOTES

Quality: our priority commitment

Research, technological innovation, training, respect for personnel, employee and environmental safety and total customer care are all factors that Camozzi considers strategic in the achievement of quality.

To Camozzi quality is a system that ensures excellence, not only of the final product but throughout the entire business process.

Our certifications

Camozzi's main goals include quality and safety, the protection of the environment and compatibility of our activities with the territories in which they are performed.

Since 1993 Camozzi has been certified in accordance with the ISO 9001 standard for quality management. In 2003 the company obtained ISO 14001 certification for environmental management.

In the same year, DNV, the global quality assurance and risk management company, certified Camozzi's Integrated Management System, which includes both ISO 9001 and ISO 14001 standards. Furthermore, in 2013 Camozzi obtained ISO/TS 16949 certification for the Series C-Truck and Series 9000 fuel fittings, then transitioned to the new edition of the IATF 16949 standard in 2018.

From 1 July 2003, all products sold in the European Union and destined to be used in potentially explosive areas, had to be approved according directive 94/9/CE, also known as ATEX.

This directive covered both electrical and non-electrical parts, including for instance pneumatic power and control equipment.

Mandatory directives
- Directive 99/34/EC concerning liability for defective products modified by Legislative Decree 02/02/01 n° 25.
- Directive 2014/35/EU "Equipment designed for use within certain voltages".
- Directive 2014/30/EU "Electromagnetic Compatibility EMC" and relative additions.
- Directive 2014/34/EU "Atex".
- Directive 2006/42/EC "Machinery".
- Directive 2014/68/EU "Pressure Equipment Directive".
- Directive 2001/95/EC "General product safety".
- Regulation 1907/2006 concerning the Registration, Evaluation, Authorisation and Restriction of Chemicals (REACH).

Technical standards
- ISO 4414 - Pneumatic fluid power - General rules and safety requirements for systems and their components

Environmental notes
- Packaging: we respect the environment, so use materials which can be recycled, including recyclable PE and paper.
- Green Design Project: in the study of new products, the environmental impact is always taken into consideration (real project, elaboration, etc.).

Information for the use of Camozzi products

In order to ensure proper functioning of Camozzi products these general guidelines should be noted.

Air quality

While resources such as electricity, water and gas are normally supplied by external companies to guaranteed standards, compressed air is produced from the ambient atmosphere. It is therefore the user that has to guarantee compressed air quality.

High quality air is essential for proper functioning of pneumatic systems. One cubic metre of air at atmospheric pressure typically contains the following:
- more than 150 million solid particles with dimensions from 0,01 µm to 100 µm,
- fumes due to combustion,
- water vapour, with volume depending on temperature; at 30° there are about 30 g/m³ of water
- oil, up to about 0,03 mg
- micro organisms
- plus a variety of chemical contaminants, odours etc ...

The further the air is compressed, the higher the air quantity in the same volume and therefore the higher the amount of contaminants.

In order to reduce unwanted contents, compressors are fitted with filters, driers and oil separators at the inlet and outlet.

In spite of these precautions, the air, during its passage along pipes and tubes or while in storage tanks, can collect contaminants such as flakes of rust. Further, water vapour contained in the air can cool down and liquefy, then absorb and retain oil fumes.

For this reason it is advisable to fit compressed air systems and pneumatic machinery with air treatment equipment.

Air treatment: classification according to ISO 8573-1-2010 standard

ISO 8573-1-2010 Class	Solid particles				Water		Oil
	Max. Number of Particles per m³			Max Concentration mg/m³	Water pressure dew point °C	Liquid g/m³	Total content (liquid, aerosol and vapour) mg/m³
	0,1 - 0,5 µm	0,5 - 1 µm	1 - 5 µm				
0	More strict than class 1, defined by the device user						
1	≤ 20,000	≤ 400	≤ 10	-	≤ - 70°	-	≤ 0,01
2	≤ 400,000	≤ 6,000	≤ 100	-	≤ - 40°	-	≤ 0,1
3	-	≤ 90,000	≤ 1,000	-	≤ - 20°	-	≤ 1
4	-	-	≤ 10,000	-	≤ + 3°	-	≤ 5
5	-	-	≤ 100,000	-	≤ + 7°	-	-
6	-	-	-	≤ 5	≤ + 10°	-	-
7	-	-	-	5 - 10	-	≤ 0,5	-
8	-	-	-	-	-	0,5 - 5	-
9	-	-	-	-	-	5 - 10	-
X	-	-	-	> 10	-	> 10	-

Different types of air treatment equipment have different functions: isolation valves, pressure regulators, soft-start valves and of course filters.
In some applications lubricators are still used, but this is increasingly unusual.
Regarding filtering, there are international standards, such as ISO 8573-1-2010, that classify air according to its quality.

ISO 8573-1-2010 classifies compressed air according to the presence of three contaminating categories: solid particles, water or water vapour, and concentration of micro mist or oil vapours. In general, if not specified otherwise in the characteristics of the single component, Camozzi products require an ISO 8573-1-2010 class 7-4-4 air quality.

- class 7 = air has a maximum concentration of SOLID PARTICLES of 5 mg/m³.
The filtering elements are designed to separate solid particles with a dimension of more than 25 µm.
The air exiting from our filters and therefore the air at the inlet of all other components can contain solid particles with a maximum concentration of 5 mg/m3 and with a maximum dimension of 25 µm.

- class 4 = the compressed AIR temperature has to be ≤ 3°C in order for entrained water vapour to condense and become liquid.
Conventional filters have characteristics that separate the humidity in the air only if it is in a liquid or near-liquid state.
It is the cooling of the air that enables condensation and removal of water vapour.
The air flow entering the bowl of the filter sustains a minimum expansion phase, (according to the Gas Law when gas suddenly expands, its temperature drops) followed by a vortex, this enables the heavier particles and the water vapour (condensing due to the expansion) to adhere to the sides of the bowl and slide down towards the drain.
Except for specific versions, users of Camozzi filters have to install driers in their compressed air production systems that, by cooling the air, dehumidify it.

- class 4 = the concentration of OIL PARTICLES must be of maximum 5 mg/m³.
It should be noted that compressors use oil for lubrication and that this can be carried into the compressed air system in the form of aerosol, vapour or liquid.
This oil, as with all other contaminants, can be transported by the air into the pneumatic circuit. It can then contact the seals of the components and subsequently pass into the environment through the outlets of the solenoid valves. In this case coalescing filters are used to aggregate those micro-molecules of oil suspended in the air and remove them.
The use of Camozzi coalescing filters enable to reach classes 2 and 1.
It is important to keep in mind that best performance is reached only by means of a multi-phase filtering process with subsequent phases.
As illustrated, different filters have different characteristics - a very efficient filter for a certain contaminant may not be so effective for other contaminants.

The filtering elements determine the class of the filters, these elements should be replaced after a specified period or after a specified number of working hours. These parameters vary according to the characteristics of the incoming air.

Camozzi filters are subdivided into different groups:
- Filtering element of 25 µm, class 7-8-4
- Filtering element of 5 µm, class 6-8-4
- Filtering element of 1 µm, class 2-8-2 with pre-filter class 6-8-4
- Filtering element of 0,01 µm, class 1-8-1 with pre-filter class 6-8-4 residual oil content of 0,01 mg/m³
- Activated carbon, class 1-7-1 with pre-filter class 1-8-1 residual oil content of 0,003 mg/m³

The components are factory greased with special products and do not need an additional lubrication. In case it should be necessary, use ISO VG 32 oil.
The quantity of oil introduced into the circuit depends on the applications.
Camozzi suggests a maximum dosage of three drops per minute.

Pneumatic cylinders

The choice of the correct cylinder mounting and also that of the rod attachment to any moving parts, are as important as the control of parameters relating to speed, mass and radial loads.
The control of these parameters has to be guaranteed by the user.
The location of position sensors (reed switches), and their switching response times to magnetic fields, is dependent upon the type and bore size of the cylinder and the appropriate precautions need to be taken when fixing these items. (see notes on the pages about sensors).

We do not advise the use of a cylinder as a shock absorber or for pneumatic cushioning. If used at the maximum speed, we recommend gradual deceleration to avoid a violent impact between piston and the cylinder end cover.
As a general value, we calculate a maximum average speed of 1 m/sec.
In this case no lubrication is required as the lubrication introduced during assembly is sufficient to guarantee good operation.
If faster speeds are required, we suggest lubrication in the quantities described above.

Directive ATEX 2014/34/EU: Products classified for the use in potentially explosive atmospheres

ATEX
2014/34/EU

Since 19 April 2016 all products which are sold in the European Union and destined to be used in **potentially explosive atmospheres** have had to be approved according to new Directive 2014/34/EU, also known as ATEX. This Directive applies to both electrical and non-electric items, such as pneumatic drives.

Main changes introduced by Directive 2014/34/EU:

- Non-electric apparatus and devices, such as pneumatic cylinders, have to comply with the Directive.
- Equipment is classified into different categories, which identifies the potentially explosive zones in which they may be used.
- The products are identified with the CE mark Ex.
- The instructions for use and the declarations of conformity should be supplied with each product that is to be used in potentially explosive zones.
- The Directive applies to products intended to be used in zones that are potentially explosive due to the presence of dust as well as to zones where potentially explosive gases may be present.
  A potentially explosive atmosphere could be composed of gas, mist, steam or dust, which may be present constantly, intermittently or created by processes conducted within the zone. An explosion can occur when there are one or more inflammable substances plus an ignition source present.

An ignition source could be:

- Electrical (electric arcs, induced current, heat generated by the Joule effect, i.e. heat created when an electric current flows through a resistance.)
- Mechanical (heat between surfaces caused by friction, sparks generated by the collision of metallic bodies, electrostatic discharges, adiabatic compression, i.e. compression of an atmosphere causing a temperature rise)
- Chemical (exothermic reactions between materials)
- Naked flames. The products which are subject to approval are those which, during their normal use or because of a malfunction, present one or more ignition sources within a potentially explosive atmosphere.

The manufacturer has to guarantee that the product conforms to the declarations and carries the appropriate markings. Moreover, the product should always be accompanied by the appropriate instructions.

The maker and/or user of the equipment should identify the risk zone(s), as defined by Directive 99/92/CE, in which the products are to be used and ensure all instructions are followed.

In the case where a product is made up of two or more components with different markings, the component which is classified in the lowest category defines the class to which the complete product belongs.

Example:
solenoid suitable for Category 3 marked ...
Ex - II 3 Ex...

and valve suitable for Category 2 ...
Ex - II 2 Ex...

The valve unit with solenoid can be used only in Category 3 or Zone 2/22.

Zones, groups and categories

In the places and for the types of equipment subject to Directive 99/92/CE, the user should identify the classification of the zones in relation to the danger of the creation of explosive atmospheres because of the presence of gas or dust.

Apparatus and equipment for the use in potentially explosive zones are divided in groups:

Group I > apparatus used in mines

Group II > apparatus used in installations above ground

Group I: Apparatus used in mines

CATEGORY M1 Functioning in explosive atmospheres
CATEGORY M2 Non-supplied equipment in explosive atmospheres

Group II: Apparatus for installations above ground

Product category	Gas	Dust
1	Zone 0	Zone 20
2	Zone 1	Zone 21
3	Zone 2	Zone 22

Classification of zones according to Directive 99/92/CE

Category 1	Zone 0 -	Area in which (permanently, for long periods or often) an explosive atmosphere is present, consisting of a mixture of air and inflammables in the form of gas, vapour or mist.
	Zone 20 -	Area in which (permanently, for long periods or often) an explosive atmosphere is present in the form of a dust/powder cloud which is combustible in air.
Category 2	Zone 1 -	Area in which, during normal activities, the formation of an explosive atmosphere is probable, consisting of a mixture of air and inflammables in the form of gas, vapours or mist.
	Zone 21 -	Area in which occasionally during normal activities the formation of an explosive atmosphere is probable, in the form of a dust cloud which is combustible in air.
Category 3	Zone 2 -	Area in which, during normal activities, the formation of an explosive atmosphere, consisting of a mixture of air and inflammables in the form of gas, vapour or mist is not probable and, whenever this should occur, it is only of a short duration.
	Zone 22 -	Area in which, during normal activities, the formation of an explosive atmosphere in the form of a combustible dust cloud is not probable and, whenever this should occur, it is only of a short duration.

Example of Marking: Ex II 2 GD c T100°C (T5) -20°C≤Ta≤60°C

II	II Group: Devices which are to be used in spaces exposed to risks of an explosive atmosphere, different from underground spaces, mines, tunnels, etc., classified according to the criteria in Annex I of the Directive 2014/34/EU (ATEX).
2	Category: Devices designed to function in compliance with the operational parameters determined by the manufacturer and guarantee a high protection level.
GD	Qualification gas and dusts: Protected against gas (G) and explosive dusts (D).
c	Non-electrical devices: Non-electrical devices for potentially explosive atmospheres. Protection through constructive security.
T 100°C	Max. temperature for components for dusts: Max. superf. temp. of 100°C regarding potential hazards resulting from striking within the vicinity of hazardous dusts.
T5	Max. temperature for components for gas: Max. superf. temp. of 100°C regarding potential hazards which may result from striking within gas environments.
Ta	Environmental temperature: **-20°C≤Ta≤60°C.** Environmental temperature range (with dry air)

Group I: Temperature classes

Temperature = 150°C or = 450°C according to the level of dust on the apparatus.

Group II: Temperature classes

Temp. classes for gas (G)	Admissible surface temperatures
T1	450°C
T2	300°C
T3	200°C
T4	135°C
T5	100°C
T6	85°C

ATEX certified Camozzi products

APPARATUS classified as ATEX Group II

Cylinders

Series	Category	Zone	Gas/Dust
16*	2 DE-3 SE	1/21 DE -2/22 SE	G/D
24*	2 DE-3 SE	1/21 DE-2/22SE	G/D
25*	2 DE-3 SE	1/21 DE-2/22SE	G/D
31-32	2 DE-3 SE	1/21DE-2/22SE	G/D
31-32 Tandem/multi-position	2 DE	1/21 DE	G/D
40*	2 DE	1/21 DE	G/D
41*	2 DE	1/21 DE	G/D
60*	2 DE-3 SE	1/21 DE-2/22 SE	G/D
61*	2 DE-3 SE	1/21 DE-2/22 SE	G/D
62*	2 DE	1/21 DE	G/D
63*	2 DE-3 SE	1/21 DE-2/22 SE	G/D
27	2 DE	1/21 DE	G/D
QP-QPR	2 DE-3 SE	1/21 DE-2/22 SE	G/D
QN	3 SE	2/22 SE	G/D
42	2 DE-3 SE	1/21 DE-2/22 SE	G/D
ARP	2	1/21	G/D
QCT-QCB-QXT-QXB	2	1/21	G/D

Proximity switches

Series	Category	Zone	Gas/Dust
CSH/CST/CSV	3	2/22	G/D
CSG	3	2/22	G/D

Valves

Series	Category	Zone	Gas/Dust
P	3	2/22	G/D
W	3	2/22	G/D
Y	3	2/22	G/D

Solenoids

Series	Category	Zone	Gas/Dust
U70	3	2/22	G/D
H80I**	2	1/21	G/D

Pressure switches

Series	Category	Zone	Gas/Dust
PM 11**	1	0/20	G/D

Freely installable **COMPONENTS** classified as ATEX Group II

Products	Category	Zone	Gas/Dust
Silencers	2	1/21	G/D
Quick release couplings	2	1/21	G/D
Manifolds	2	1/21	G/D
Sub-bases	2	1/21	G/D
Feet	2	1/21	G/D
Caps	2	1/21	G/D
Plates	2	1/21	G/D

Valves

Series	Category	Zone	Gas/Dust
9#*	2	1/21	G/D
A#	2	1/21	G/D
2	2	1/21	G/D
3#	2	1/21	G/D
4#	2	1/21	G/D
NA (NAMUR) #	2	1/21	G/D
E (pneumatic)	2	1/21	G/D

FRL

Series	Category	Zone	Gas/Dust
MC#	2	1/21	G/D
N	2	1/21	G/D
MX#	2	1/21	G/D
T	2	1/21	G/D
CLR	2	1/21	G/D
M	2	1/21	G/D
MD#	2	1/21	G/D

* According to ISO standard
** Products with ATEX and IECEX certification
# Without solenoid

» The order code number of the certified products is obtained by adding "EX" to the standard article number
Es. 358-015 standard solenoid valve
Es. 358-015EX ATEX certified solenoid valve

Accessories available in Category 2 Zone 1/21: couplings, junctions, brackets, piston rod nuts, nuts, counter brackets, bushings, pins, clevis pins, caps, gaskets, diaphragm, sub-bases, plates, feet, hand operated valves, flow valves, flanges, screw, tie rods, automatic and blocking valves, silencers and pressure gauge, connector kits, clamps, rapid and super rapid push-in fittings, hoses, sealing rings, locking nuts. Accessories available in Category 3, Zone 2/22: adaptors, slot covers, extensions, connectors. For more information on this kind of products see the website:
http://catalogue.camozzi.com within the section: Downloads > Certifications > ATEX Directive 2014/34/EU > List of products excluded from the directive 2014/34/EU ATEX.

Camozzi around the world

Camozzi Automation S.p.A.
Società Unipersonale
Via Eritrea, 20/I
25126 Brescia
Italia
Tel. +39 030/37921
Fax +39 030/2400464
info@camozzi.com
www.camozzi.com

Camozzi Neumatica S.A.
Polo Industrial Ezeiza,
Puente del Inca 2450,
B1812IDX, Carlos Spegazzini, Ezeiza
Provincia de Buenos Aires
Argentina
Tel. +54 11/52639399
info@camozzi.com.ar
www.camozzi.com.ar

Camozzi Automation GmbH
Löfflerweg 18
A-6060 Hall in Tirol
Austria
Tel. +43 5223/52888-0
Fax +43 5223/52888-500
info@camozzi.at
www.camozzi.at

Camozzi Pneumatic
66-1, Perehodnaya str.,
220070, Minsk
Belarus
Tel. +375 17/3961170 (71)
Fax +375 17/3961170 (71)
info@camozzi.by
www.camozzi.by

Camozzi do Brasil Ltda.
Rod. Adauto Campo Dall'Orto, 2.200
Condomínio Techville
CEP 13178-440 Sumaré S.P.
Brazil
Tel. +55 19/21374500
sac@camozzi.com.br
www.camozzi.com.br

Shanghai Camozzi Automation Control Co, Ltd.
717 Shuang Dan Road, Malu
Shanghai - 201801
China
Tel. +86 21/59100999
Fax +86 21/59100333
info@camozzi.com.cn
www.camozzi.com.cn

Camozzi S.r.o.
V Chotejně 700/7
Praha - 102 00
Czech Republic
Tel. +420 272/690 994
Fax +420 272/700 485
info@camozzi.cz
www.camozzi.cz

Camozzi Automation ApS
Metalvej 7 F
4000 Roskilde
Denmark
Tel. +45 46/750202
info@camozzi.dk
www.camozzi.dk

Camozzi Automation OÜ
Osmussaare 8
13811 Tallinn
Estonia
Tel. +372 6119055
Fax +372 6119055
info@camozzi.ee
www.camozzi.ee

Camozzi Automation Sarl
5, Rue Louis Gattefossé
Parc de la Bandonniére
69800 Saint-Priest
France
Tel. +33 (0)478/213408
Fax +33 (0)472/280136
info@camozzi.fr
www.camozzi.fr

Camozzi Automation GmbH
Porschestraße 1
D-73095 Albershausen
Germany
Tel. +49 7161/91010-0
Fax +49 7161/91010-99
info@camozzi.de
www.camozzi.de

Camozzi India Private Limited
D-44, Hosiery Complex,
Phase II Extension,
Noida - 201 305
Uttar Pradesh
India
Tel. +91 120/4055252
Fax +91 120/4055200
info@camozzi-india.com
www.camozzi.in

Camozzi Pneumatic Kazakhstan LLP
Shevchenko/Radostovets,
165b/72g, off. 615
050009 Almaty
Kazakhstan
Tel. +7 727/3335334 - 3236250
Fax +7 727/2377716 (17)
info@camozzi.kz
www.camozzi.kz

Camozzi Malaysia SDN. BHD.
30 & 32, Jalan Industri USJ 1/3
Taman Perindustrian USJ 1
47600 Subang Jaya
Selangor
Malaysia
Tel. +60 3/80238400
Fax +60 3/80235626
cammal@camozzi.com.my
www.camozzi.com.my

Camozzi Neumatica de Mexico S.A. de C.V.
Lago Tanganica 707
Col. Ocho Cedros 2ª sección
50170 Toluca
México
Tel. +52 722/2707880 - 2126283
Fax +52 722/2707860
camozzi@camozzi.com.mx
www.camozzi.com.mx

Camozzi Automation AS
Verkstedveien 8
1400 Ski
Norway
Tel. +47 40644920
info@camozzi.no
www.camozzi.no

Camozzi Pneumatic LLC
Chasnikovo,
Solnechnogorskiy District
Moscow 141592
Russian Federation
Tel. +7 495/786 65 85
Fax +7 495/786 65 85
info@camozzi.ru
www.camozzi.ru

Camozzi Iberica SL
Avda. Altos Hornos de Vizcaya, 33, L-2
48901 Barakaldo - Vizcaya
Spain
Tel. +34 946 558 958
info@camozzi.es
www.camozzi.com

Camozzi Automation AB
Bronsyxegatan 7
213 75 Malmö
Sweden
Tel. +46 40/6005800
info@camozzi.se
www.camozzi.se

Camozzi Automation B.V.
De Vijf Boeken 1 A
2911 BL Nieuwerkerk a/d IJssel
The Netherlands
Tel. +31 180/316677
info@camozzi.nl
www.camozzi.nl

LLC Camozzi
Kirillovskaya Str, 1-3, section "D"
Kiev - 04080
Ukraine
Tel. +38 044/5369520
Fax +38 044/5369520
info@camozzi.ua
www.camozzi.ua

Camozzi Automation Ltd.
The Fluid Power Centre
Watling Street
Nuneaton, Warwickshire
CV11 6BQ
United Kingdom
Tel. +44 (0)24/76374114
Fax +44 (0)24/76347520
info@camozzi.co.uk
www.camozzi.co.uk

Camozzi Automation, Inc.
Street address:
2160 Redbud Boulevard, Suite 101
McKinney, TX 75069-8252
Remittances:
P.O. Box 678518
Dallas, TX 75267-8518
USA
Tel. +1 972/5488885
Fax +1 972/5482110
info@camozzi-usa.com
www.camozzi-usa.com

Camozzi Venezuela S.A.
Calle 146 con Av. 62
N°146-180
P.O. Box 529
Zona Industrial Maracaibo
Edo. Zulia
Venezuela
Tel. +58 261/4116267
info@camozzi.com.ve
www.camozzi.com.ve

Camozzi R.O.
in Hochiminh City
6th Floor, Master Building,
155 Hai Ba Trung St.,
Ward 6, District 3
Hochiminh City
Vietnam
Tel. +84 8/54477588
Fax +84 8/54477877
bhthien@camozzi.com.vn
www.camozzi.com.vn

Camozzi distributors around the world

Europe

ZULEX d.o.o.
Safeta Zajke 115b
Sarajevo
Bosnia-Herzegovina
Tel. +387 33/776580
Fax +387 33/776583
zulex@bih.net.ba
www.zulex.com.ba

L.D. GmbH
Blvd Asen
Yordanov 5
1592 Sofia
Bulgaria
Tel. +359 2/9269011
Fax +359 2/9269025
camozzi@ld-gmbh.com
www.ld-gmbh.com

Bibus Zagreb d.o.o.
Anina 91
HR 10000 Zagreb
Croatia
Tel. +385 1/3818004
Fax +385 1/3818005
bibus@bibus.hr
www.bibus.hr

TS Hydropower Ltd.
Industrial Area N°64
Aglanzia 21-03
Nicosia
Cyprus
Tel. +357 22/332085
Fax +357 22/338608
tshydro@cytanet.com.cy

AVS-Yhtiöt Oy
Rusthollarinkatu 8
02270 Espoo
Finland
Tel. +358 10/6137100
Fax +358 10/6137701
info@avs-yhtiot.fi
www.avs-yhtiot.fi

TECHNOMATIC Group IKE
Esopou str, Kalochori Industrial Park
57009, Thessaloniki
Greece
Tel. +30 2310/752773
Fax +30 2310/778732
info@technomaticgroup.gr
www.technomaticgroup.gr

Tech-Con Hungária Kft
Véső u. 9-11 (entrance: Süllő u. 8.)
1133 Budapest
Hungary
Tel. +36 1/412 4161
Fax +36 1/412 4171
tech-con@tech-con.hu
www.tech-con.hu

Loft & Raftæki
Hjallabrekka 1
200 Kópavogur
Iceland
Tel. +354 564/3000
Fax +354 564/0030
loft@loft.is
www.loft.is

DBF TECHNIC SIA
Bauskas iela 20 - 302
1004 Riga
Latvia
Tel. +371 296 26916
Fax +371 6 7808650
info@pneimatika.lv
www.pneimatika.lv

Hidroteka Engineering UAB
Chemijos 29E
LT-51333 Kaunas
Lithuania
Tel. +370 37/452969
Fax +370 37/760500
hidroteka@hidroteka.lt
www.hidroteka.lt

Rayair Automation Ltd.
KW23G - Corradino Ind. Estate
Paola, PLA3000
Malta
Tel. +356 21/672497
Fax +356 21/805181
sales@rayair-automation.com
www.rayair-automation.com

Bibus Menos Sp. z o.o.
ul. Spadochroniarzy 18
80-298 Gdańsk
Poland
Tel. +48 58/6609570
Fax +48 58/6617132
info@bibusmenos.pl
www.bibusmenos.pl

Experts d.o.o.
Mitropolit Teodosij Gologanov, 149
MK-1000 Skopje
Rep. of Macedonia
Tel. +389 2/3081970
experts@t.mk
www.experts.com.mk

Tech-Con Industry S.r.l.
Calea Crângasi N°60
Sector 6, 060346 Bucharest
Romania
Tel. +40 21/2219640
Fax +40 21/2219766
automatizari@tech-congroup.com
www.tech-con.ro

Tech-Con d.o.o. Beograd
Cara Dušana 205a
11080 Zemun - Belgrade
Serbia
Tel. +381 11/4142790
Fax +381 11/3166760
office.belgrade@tech-congroup.com
www.tech-con.rs

STAF Automation, s.r.o.
Kostiviarska 4944/5
974 01 Banská Bystrica
Slovakia
Tel. +421 48/4722777
Fax +421 48/4722755
staf@staf.sk
www.staf.sk

KOVIMEX d.o.o.
Podskrajnik 60,
SI-1380 Cerknica
Slovenia
Tel. +386 1/7096430
Fax +386 1/7051930
kovimex@kovimex.si
www.kovimex.com

BIBUS AG
Allmendstrasse 26
CH-8320 Fehraltorf
Switzerland
Tel. +41 44/8775011
Fax +41 44/8775019
info.bag@bibus.ch
www.bibus.ch

Hidrel Hidrolik Elemanlar San. Ve Tic. A.Ş.
Percemli Sok. No:7 Tunel Mevkii
34420 Karakoy Istanbul
Turkey
Tel. +90 212 251 73 18 - 249 48 81
Fax +90 212 292 08 50
info@hidrel.com.tr
www.hidrel.com.tr

>>

Camozzi distributors around the world

America

LEVCORP S.A.
Av. Roma No. 7447
Zona Obrajes
La Paz
Bolivia
Tel. +591 2 2815658
Fax +591 2 2815695
info@levcorp.bo
www.levcorp.bo

NOMADA Ltda
Panamericana Norte 2998 unidad 3036
Renca - Santiago
Chile
Tel. +56 2 2904 0032
ventas@nomadachile.com
www.nomadachile.com

Eurotécnica de Costa Rica AYM, S.A.
150 m oeste del cruce de Llorente,
hacia Epa Tibás
Costa Rica
Tel. +506 2241/4242 - 4230
Fax +506 2241/4272
eurotecnica@eurotecnicacr.com
www.eurotecnicacr.com

Fluidica Cia. Ltda.
Abelardo Moncayo Oe4-08 y Av. América
Quito, Pichincha
Ecuador
Tel. +593 2/2440848 - 2/5102004 -
2/2254773
Fax +593 2/2440848
info@fluidica-ec.com
www.fluidica-ec.com

Aplitec S.A. de C.V.
75 Av. Nte,
Residencial Escalon Norte II
Pje KL #3-C
San Salvador
El Salvador
Tel. +503 2557/2666
Fax +503 2557/2652
info@aplitecsv.com
www.aplitecsv.com

Isotex de Panamá,S.A.
Plaza El Conquistador, Local #45
Vía Tocúmen, Panamá City
Panamá
Tel. +507 217-0050
Fax +507 217-0049
info@isotexpty.com

Eicepak S.A.C.
Av. Los Cipreses N° 484 Los Ficus
Santa Anita - Lima
Perù
Tel. +51 1/3628484 - 3627127
- 3628698
ventas1@eicepak.com
www.eicepak.com

LT Industrial, SRL
Ave. Charles Summer #53, suite 24B
Plaza Charles Summer
Santo Domingo, Los Prados
Repubblica Dominicana
Tel. +1809-623-5156
Fax +1829-956-7205
info@ltindustrialrd.com

Cocles S.A.
BVAR Artigas 4543 P.O. Box 11800
Montevideo
Uruguay
Telefax +598 22030307/22006428/
22090446
cocles@adinet.com.uy
www.cocles.com.uy

Middle East

Compressed Air Technology Co.Saa
Cairo-Alexandria Desert Road Kilo 28
Behind Gas Station Emirates
Abu Rawash
Egypt
Tel. +20 35391986/35391987/35391985
Fax +20 35391990
neveen@elhaggarmisr.com
info@elhaggarmisr.com
www.elhaggarmisr.com

Automation Yeruham & Co.
34, Hahofer st.
PO Box 1844 Length 5811702 Holon
Israel
Tel. +972 73/2606401
Fax +972 3/5596616
office@ayeruham.com
www.ayeruham.com

Raymond Feghali Co.
For Trade & Industry SARL
Roumieh industrial zone - Lebanon
P.O. BOX 90-723 Jdeideh
Lebanon
Tel. +961 1/893176 - 3/660287
Fax +961 1/879500
info@raymondfeghalico.com
www.raymondfeghalico.com

Techno-Line Trading & Services WLL
Ware House 05, Building 2189
Road 1529, Block 115
Hidd
Kingdom of Bahrain
Tel. +973 17783906
Fax +973 17786906
techline@batelco.com.bh
sales@technoline.me

AL-Maram National Co. For Buildings
General Contracting W.L.L.
Shuwaikh Industrial Area Pl. Shop No. 9
Shuwaikh
Kuwait
Tel./Fax +965 24828108
Cell. +965 65615386
almaramkuwait@gmail.com
www.almaramgtc.com

Al-Hawaiya for Industrial Solutions Co.
(ALHA)
Kilo - 3, Makkah Road
P.O. Box 11429
Jeddah 21453
Saudi Arabia
Tel. +966 12/6576874
Fax +966 12/6885061
info@alha.com.sa
www.alha.com.sa

I.M.O.
Industrial Machine Trd. Co. L.L.C.
P.O. Box 20376
Sharjah
United Arab Emirates
Tel. +971 6/5437991 - 6/5437992
Fax +971 6/5437994
imo@eim.ae

Asia

PT. Golden Archy Sakti
Kompleks Prima Centre Blok B2 No.2
Jl.Pool PPD - Pesing Poglar No.11,
Kedaung Kali Angke - Cengkareng,
Jakarta Barat 11710
Indonesia
Tel. +62 21/54377888
Fax +62 21/54377089
sales@archy.co.id
www.archy.co.id

Seika Corporation
Aqua Dojima East Bldg.
16F, 4-4, 1-Chome, Dojimahama,
Kita-Ku Osaka
Japan
Tel. +81 6/63453175
Fax +81 6/63443584
konof@jp.seika.com

Polytechnic Automation
Suite 604, 6th Floor, K. S.
Trade Tower,
New Challi,
Shahrah-e-Liaquat,
Karachi - 74000,
Pakistan
Tel. +9221 32426612
Fax +9221 32426188
polytech_ent@yahoo.com

Exceltec Automation Inc.
608-G, EL-AL Building,
Quezon Avenue, Tatalon
Quezon City, 1113
Philippines
Tel. +632/4161143 - 4161141
- 731 9015
Fax +632/7121672
sales.manila@exltec.com

Exceltec Enviro Pte Ltd
Block 3025 Ubi Road 3
03-141
408653
Singapore
Tel. +65/67436083
Fax +65/67439286
sales@exltec.com

Taewon-AP
Geomdanbuk-ro 40-gil, Buk-gu
Daegu 41511
South Korea
Tel. +82 53 384 1058
Fax +82 53 384 1057
info@taewon-ap.com
www.taewon-ap.com

Korea Flutech Co. Ltd
No15-4, 101-gil Palgong-ro, Dong-gu,
Daegu, 41005
South Korea
Tel. +82 53 213 9090
Fax +82 53 353 5997
info@kflutech.com
www.kflutech.com

Savikma Automation & Engineering Services (Pvt) Ltd.
22, Wattegedara Road
Maharagama
Sri Lanka
Tel. +94 115642164
Hot line +94 777800070
Fax +94 112844777
saes@sltnet.lk

Zenith Automation International Co., Ltd.
1F., No.9, Aly. 1, Ln. 5,
Sec. 3, Ren'ai Rd.,
Da'an Dist., Taipei City 10651
Taiwan (R.O.C.)
Tel. +886 2/2781 1267
Fax +886 2/3322 8973
zaisales@z-auto.com.tw
www.z-auto.com.tw

Pneumax Co. Ltd.
107/1 Chaloem Phrakiat R.9 Rd.,
Pravet - Bangkok 10250
Thailand
Tel. +66 2/7268000
Fax +66 2/7268260
import@pneumax.co.th
www.pneumax.co.th

Africa

Boudissa Technology Sarl
25, Cité 20 Août 1955
Oued Roumane El Achour
Algiers - 16403
Algeria
Tel./Fax +213 (0) 23316751
Tel./Fax +213 (0) 23316733
contact@boudissatech.com
www.boudissatech.com

DISMATEC
Distribution de Materiels Techniques
N° RCCM-CI-ABJ-2010B1882
16 BP 236 ABIDJAN 16
Ivory Coast
Tel. +225 21267091
Fax +225 21262367
dismatec2002@yahoo.fr

Hydramatics Control Equipment
15 Village Crescent,
Linbro Business Park,
Sandton Johannesburg 2065
South Africa
Tel. +2711/6081340 - 1 - 2
Fax +2786/5516311
sales@hydramatics.co.za
www.hydramatics.co.za

A.T.C. Automatisme
Avenue Habib Bourguiba
Centra Said - BP 25 2033
Megrine
Tunisia
Tel. +216 71/297328
Fax +216 71/429084
commercial@atc-automatisme.com
www.atc-automatisme.com

Oceania

Griffiths Components Pty Ltd
605 Burwood Hwy
Knoxfield Victoria
Melbourne 3180
Australia
Tel. +61 3/9800 6500
Fax +61 3/9801 8553
enquiry@camozzi.com.au

Contacts

Camozzi Automation S.p.A.
Società Unipersonale
Via Eritrea, 20/I
25126 Brescia
Italy
Tel. +39 030 37921
info@camozzi.com

93-0518-06B008 03/2019

CAMOZZI
Automation

A Camozzi Group Company
www.camozzi.com